Product Data Sheet
July 2017
00813-0100-4697, Rev PA

Rosemount™ 848T High Density Temperature Measurement Family

- Innovative temperature measurement for high density applications that provide installation and operational savings.
- Independently configurable inputs that support RTD, thermocouple, ohm, mV, 0–10 volt, and 4–20 mA signals.
- Enclosure options and intrinsically safe design allows for installation close to any process, including hazardous areas.
- *Wireless*HART® capabilities extends the full benefits of Plantweb™ to previously inaccessible locations.
- Industry first measurement validation diagnostic can identify a variety of process concerns including sensor degradation, sensor wiring connectivity, high vibration (affecting the measurement), and abnormal process variations.

High Density Temperature Measurement

Smart Wireless delivers innovative wireless solutions for temperature measurement

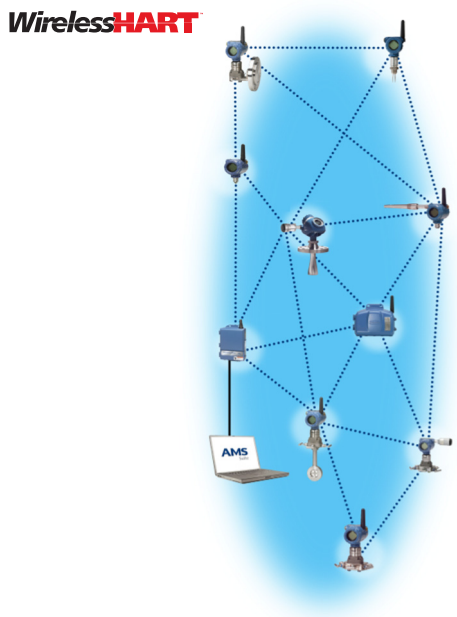

- Self-organizing network delivers information rich data with greater than 99 percent data reliability and establishes a highly stable network.
- IEC-approved *Wireless*HART protocol .
- Emerson SmartPower™ Solutions provide an intrinsically safe power module, allowing field replacements without removing the transmitter from the process, keeping personnel safe and reducing maintenance costs.
- Emerson's layered approach to wireless network security ensures data transmissions are secure.

FOUNDATION™ Fieldbus provides effective measurements with reduced wiring costs

- Internationally recognized digital network (IEC 61158) supports the connection of up to 16 devices on a single twisted wire pair.
- Allows advanced computations through use of function blocks.
- Provides continuous measurement status for each measurement point.
- Lower costs by reducing wiring, terminations, and required number of I.S. Barriers.

Explore the benefits of Complete Point Solution™ from Rosemount Temperature Measurement

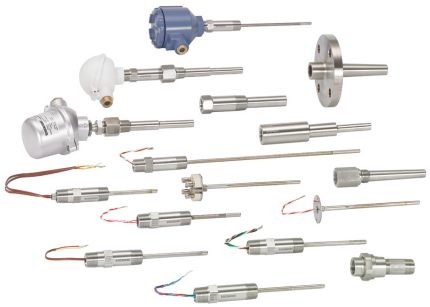

- Emerson offers a selection of RTDs and thermocouples that bring superior durability and Rosemount reliability to temperature sensing.
- A broad thermowell offering meets the demanding requirements of a variety of process applications.

Contents

Rosemount 848T FOUNDATION Fieldbus Temperature Transmitter 5
Specifications 8
Product Certifications 14
Dimensional Drawings 21
Rosemount 848T Wireless Temperature Transmitter . . 25
WirelessHART... the Industry Standard 27
Specifications 28
Product Certifications 34
Dimensional drawings 37

Experience global consistency and local support from worldwide Rosemount Temperature manufacturing sites

- World-class manufacturing provides globally consistent product from every factory and the capacity to fulfill the needs of any project.
- Experienced Instrumentation Consultants help select the right products for each temperature application.
- An extensive global network of Emerson service and support personnel can be onsite when and where they are needed.

Increase performance with High Density transmitters

- Transmit multiple measurements with one set of electronics.
- Mount close to process to reduce sensor wire length and increase measurement reliability.
- Enhance accuracy with EMI correction, cold junction compensation, and device diagnostics.
- Reduce installation costs by as much as 70 percent.

Avoid unnecessary process shutdowns, on-scale failure related issues, and unsafe process conditions with measurement validation diagnostic

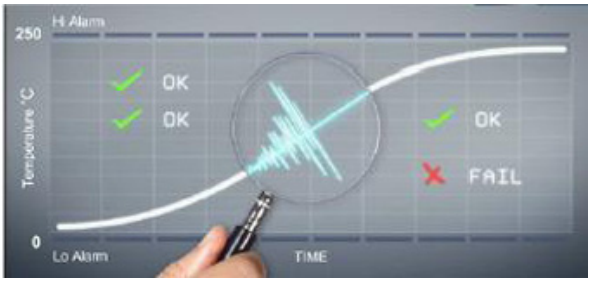

- Detect measurement abnormalities and take preventive action before shutdown is necessary.
- Determine validity of data points that are outside of alarm limits.
- Identify on-scale failures and take action before process efficiency and safety is compromised.
- Detect abnormally fast process rates of change before alarm state is reached.

High density temperature measurement

Ideal solution for taking multiple measurements in close proximity to each other such as:

- Bearing temperature on pumps and motors
- Distillation columns
- Furnaces and boilers
- Reactors, storage tanks, and many more

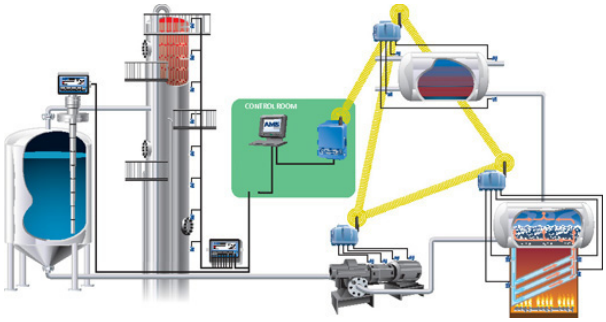

Simplify installation and reduce wiring costs

- Eliminate marshalling
- Less wire routing and fewer terminations
- Faster startups with fewer devices

Access powerful information with new device dashboards

- Leverage Human Centered Design practices to create an intuitive user interface.
- Instantly see status and output of each sensor.
- Direct links to graphical diagnostics and troubleshooting help.
- Drastically lower configuration time.

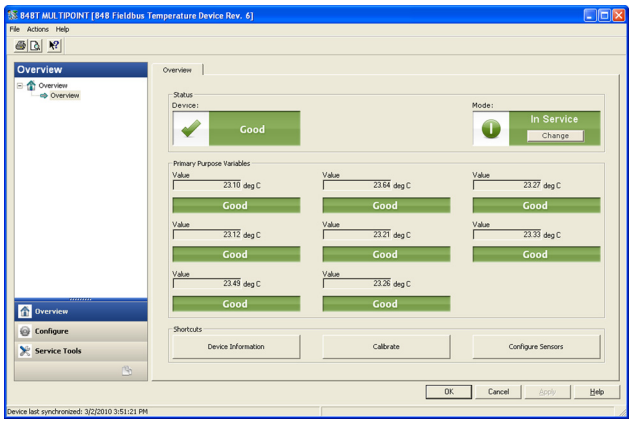

Rosemount 848T FOUNDATION Fieldbus Temperature Transmitter

The Rosemount 848T offers a low cost solution for high density measurements. The transmitter accepts eight independently configurable sensor inputs, and can be mounted close to the process to improve data quality. FOUNDATION Fieldbus architecture allows up to 128 temperature measurements to be transmitted on a single H1 Fieldbus line. Additionally, the transmitter is bus-powered, further reducing the amount of required wiring to install the device. The robust design has proven itself in thousands of successful installations. Capabilities include:

- Eight independently configurable inputs, including 2- and 3-wire RTDs, thermocouples, mV, 2- and 3-wire ohms, and 4–20 mA signals
- Industry first measurement validation diagnostic
- Fieldbus functionality with eight AI blocks, 2 MAI blocks, 4 ISEL Blocks, and backup LAS capabilities
- 600 Vdc isolation and integral transient protection

Specification and selection of product materials, options, or components must be made by the purchaser of the equipment. See page 28 for more information on material selection.

Table 1. Rosemount 848T FOUNDATION Fieldbus Ordering Table
The starred offerings (★) represent the most common options and should be selected for best delivery. The non-starred offerings are subject to additional delivery lead time.

Model	Product description		
848T	High Density Temperature Measurement Family		
Transmitter output			
F	FOUNDATION Fieldbus digital signal (includes AI, MAI, and ISEL function blocks, and Backup Link Active Scheduler)		★
Product certifications[1]		**Rosemount Junction Box required?**	
I1	ATEX Intrinsic Safety	No	★
I2	INMETRO Intrinsic Safety	No	★
I3	NEPSI Intrinsic Safety	No	★
I4	TIIS Intrinsically Safety (FISCO) Type 'ia'	No	
H4	TIIS Intrinsic Safety (FISCO) Type 'ib'	No	
I5[2]	FM Intrinsically Safe	No	★
I6[2]	CSA Intrinsically Safe	No	★
I7	IECEx Intrinsic Safety	No	★
IA	ATEX FISCO Intrinsic Safety	No	★
IB	INMETRO FISCO Intrinsic Safety	No	★
IE	FM FISCO Intrinsically Safe	No	★
IF[2]	CSA FISCO Intrinsically Safe, Division 2	No	★
IG	IECEx FISCO (Intrinsic Safety)	No	★
IM	Technical Regulations Customs Union (EAC) Intrinsic Safety	No	★
KG	FM, CSA, ATEX, and IECEx Intrinsic Safety	No	★
N1	ATEX Type n (enclosure required)	Yes	★
N3	China Type n (enclosure required)	Yes	★

Table 1. Rosemount 848T FOUNDATION Fieldbus Ordering Table
The starred offerings (★) represent the most common options and should be selected for best delivery. The non-starred offerings are subject to additional delivery lead time.

Product certifications[1]		Rosemount Junction Box required?	
N5	FM Class I, Division 2, and Dust Ignitionproof (enclosure required)	Yes	★
N6	CSA Class I, Division 2	No	★
N7	IECEx Type n (enclosure required)	Yes	★
NC	ATEX Type n Component (Ex nA nL)	No[3]	★
ND	ATEX Dust (enclosure required)	Yes	★
NJ	IECEx Type n Component (Ex nA nL)	No[3]	★
NK	FM Class I, Division 2	Yes	★
E6	CSA Explosion-proof, Dust Ignitionproof, Division 2 (JX3 enclosure required)	Yes[4]	
IM	Technical Regulations Customs Union (EAC) Intrinsic Safety	No	★
IP	Korea Intrinsic Safety	No	★
NA	No approval	No	★
Input types			
S001	RTD, thermocouple, mV, Ohm inputs		★
S002[5]	RTDs, thermocouple, mV, Ohm and 4–20 mA inputs		★

Options (Include with selected model number)

Plantweb advanced diagnostics		
D04	Measurement validation diagnostic	★
Transient protection		
T1	Integral transient protector	★
Mounting bracket		
B6	Mounting bracket for 2-in. pipe mounting – SST bracket and bolts	★
Enclosure options		
JP1	Plastic junction box; no entries	★
JP2	Plastic box, cable glands (9 × M20 nickel-plated brass glands for 7.5–11.9 mm unarmored cable)	★
JP3	Plastic Box, conduit entries (five plugged holes, suitable for installing 1/2-in. NPT fittings)	★
JA1	Aluminum junction box; no entries	★
JA2	Aluminum cable glands (9 × M20 nickel-plated brass glands for 7.5–11.9 mm unarmored cable)	★
JA3	Aluminum conduit entries (five plugged holes, suitable for installing 1/2-in. NPT fittings)	★
JS1	Stainless steel junction box; no entries	★
JS2	Stainless steel box, cable glands (9 ×M20 nickel-plated brass glands for 7.5–11.9 mm unarmored cable)	★
JS3	Stainless steel box, conduit entries (five plugged holes, suitable for installing 1/2-in. NPT fittings)	★
JX3[6]	Explosion-proof box, conduit entries (four plugged holes, suitable for installing 1/2-in. NPT fittings)	★
Software configuration		
C1	Custom configuration of date, descriptor, message and wireless parameters (requires CDS with order)	★
Line filter		
F5	50 Hz line voltage filter	★

Table 1. Rosemount 848T FOUNDATION Fieldbus Ordering Table
The starred offerings (★) represent the most common options and should be selected for best delivery. The non-starred offerings are subject to additional delivery lead time.

Calibration certificate		
Q4	Calibration certificate (3-point calibration)	★
Shipboard certification		
SBS	American Bureau of Shipping (ABS) Type Approval	★
SBV	Bureau Veritas (BV) Type Approval	★
SDN	Det Norske Veritas (DNV) Type Approval	★
SLL	Lloyd's Register (LR) Type Approval	★
Special temperature test		
LT	Test to –60 °F (–51.1 °C)	
Conduit electrical connector		
GE[7]	M12, 4-pin, male connector (eurofast®)	★
GM[7]	A size mini, 4-pin, male connector (minifast®)	★
Extended product warranty		
WR3	3-year limited warranty	★
WR5	5-year limited warranty	★
Typical model number: 848T F I5 S001 T1 B6 JA2		

1. Consult factory for availability.
2. Available only with S001 option.
3. The Rosemount 848T ordered with component approval is not approved as a stand-alone unit. Additional system certification is required.
4. Enclosure Option JX3 must be ordered with Product Certification Code E6. (O-ring for the JX3 enclosure rated to -20 °C).
5. S002 is only available with Product Certification N5, N6, N1, NC, NK, and NA.
6. JX3 Explosion-proof enclosure rated to -4 °F (-20 °C).
7. Available with no approval or Intrinsically Safe approvals only. For FM Intrinsically Safe (option code I5), install in accordance with Rosemount drawing 00848-4402.

Wiring

Figure 1. Rosemount 848T Sensor Wiring Diagram

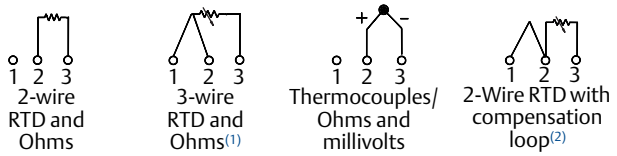

1. Emerson provides 4-wire sensors for all single-element RTDs. Use these RTDs in 3-wire configurations by clipping the fourth lead or leaving it disconnected and insulated with electrical tape.
2. The transmitter must be configured for a 3-wire RTD in order to recognize an RTD with a compensation loop.

Standard configuration

Unless otherwise specified, the transmitter will be shipped as follows for all eight sensors:

Standard configuration settings	
Sensor type[1]	Thermocouple Type J
Damping[1]	Five seconds
Measurement units[1]	°C
Output[1]	Linear with temperature
Line voltage filter[1]	60 Hz
Temperature specific blocks	Sensor transducer block (1)
FOUNDATION Fieldbus Function Blocks	Analog input (8) Multiple analog input (2) Input selector (4)
Input transient filter[1]	Enabled

1. For all eight sensors.

Specifications

Functional specifications

Inputs

Eight independently configurable channels including combinations of 2- and 3-wire RTDs, thermocouples, mV, and 2- and 3-wire ohm inputs. 4–20 mA inputs using optional connector(s).

Outputs

Manchester-encoded digital signal that conforms to IEC 61158 and ISA 50.02.

Status

If self-diagnostics detect a sensor burnout or a transmitter failure, the status of the measurement will be updated accordingly.

Ambient temperature limits

–40 to 185 °F (–40 to 85 °C)

Accuracy

(Pt 100 at reference condition: 20 °C) ±0.30 °C (±0.54 °F); for the complete list, see "Accuracy" on page 10.

Isolation

- 600 Vdc channel to channel isolation[1].
- 10 Vdc channel to channel isolation for all operating conditions with maximum 150 meters (500 feet) of sensor lead length 18 AWG.

Power supply

Powered over FOUNDATION Fieldbus with standard fieldbus power supplies. The transmitter operates between 9.0 and 32.0 Vdc, 22 mA maximum. (transmitter power terminals are rated to 42.4 Vdc.)

Transient protection

The transient protector (option code T1) helps to prevent damage to the transmitter from transients induced on the loop wiring by lightning, welding, heavy electrical equipment, or switch gears. This option is installed at the factory for the Rosemount 848T and is not intended for field installation.

Update time

Approximately 1.5 seconds to read all eight inputs

Humidity limits

0–99 percent non-condensing relative humidity

Turn-on time

Performance within specifications is achieved in less than 30 seconds after power is applied to the transmitter.

Alarms

The AI and ISEL function blocks allow the user to configure the alarms to HI-HI, HI, LO, or LO-LO with a variety of priority levels and hysteresis settings.

Electromagnetic compatibility compliance testing

- Meets the criteria under European Union Directive 2004/108/EC.
- Meets the criteria under IEC 61326: 2006.

Stability

- ±0.1% of reading or 0.1 °C (0.18 °F), whichever is greater, for two years for RTDs.
- ±0.1% of reading or 0.1 °C (0.18 °F), whichever is greater, for one year for thermocouples.

Self calibration

The transmitter's analog-to-digital circuitry automatically self-calibrates for each temperature update by comparing the dynamic measurement to extremely stable and accurate internal reference elements.

Vibration effect

Tested to the following with no effect on performance per IEC 60770-1, 1999.

Frequency acceleration	
10-60 Hz	0.21 mm peak displacement
60-2000 Hz	3 g

Backup Link Active Scheduler (LAS)

The transmitter is classified as a device link master, which means it can function as a LAS if the current link master device fails or is removed from the segment.

The host or other configuration tool is used to download the schedule for the application to the link master device. In the absence of a primary link master, the transmitter will claim the LAS and provide permanent control for the H1 segment.

1. *Reference conditions are -40 to 60 °C (-40 to 140 °F) with 30 meters (100 feet) of sensor lead length 18 AWG wire.*

Software upgrade in the field

Software for the Rosemount 848T with FOUNDATION Fieldbus is easy to upgrade in the field using the FOUNDATION Fieldbus Common Device Software Download procedure.

FOUNDATION Fieldbus parameters

Schedule Entries	20
Links	30
Virtual Communications Relationships (VCR)	20

Physical specifications

Conformance to specifications (±3σ [Sigma])

Technology leadership, advanced manufacturing techniques, and statistical process control ensure specification conformance to at least ±3σ.

Mounting

The Rosemount 848T can be mounted directly onto a DIN rail or it can be ordered with an optional junction box. When using the optional junction box, the transmitter can be mounted onto a panel or a 2-in. pipe stand (with option code B6).

Entries for optional junction box

No entry

- Used for custom fittings.

Cable gland

- 9 × M20 nickel-plated brass glands for 7.5–11.9 mm unarmored cable

Conduit

- Five plugged 0.86-in. diameter holes suitable for installing 1/2-in. NPT fittings.

Materials of construction for optional junction box

Junction box type	Paint
Aluminum	Epoxy Resin
Plastic	N/A
Stainless Steel	N/A
Aluminum Explosion-proof	N/A

Weight

Assembly	Weight		
	oz	lb	kg
Rosemount 848T only	7.5	.47	.208
Aluminum[1]	78.2	4.89	2.22
Plastic[1]	58.1	3.68	1.65
Stainless Steel [1]	77.0	4.81	2.18
Aluminum Explosion-proof	557	34.8	15.5

1. Add 35.2 oz (2.2 lb, 0.998 kg) for nickel-plated brass glands.

Environmental ratings

Type 4X and IP66 with optional junction box. JX3 Explosion-proof enclosure rated to –4 °F (–20 °C).

Function blocks

Analog Input (AI)

- Processes the measurement and makes it available on the fieldbus segment.
- Allows filtering, alarming, and engineering unit changes.

Input Selector (ISEL)

- Used to select between inputs and generate an output using specific selection strategies such as minimum, maximum, midpoint, or average temperature.
- Since the temperature value always contains the measurement status, this block allows the selection to be restricted to the first “good” measurement.

Multiple Analog Input Block (MAI)

- The MAI block allows the eight AI blocks to be multiplexed together so they serve as one function block on the H1 segment, resulting in greater network efficiency.

Accuracy

Table 2. Input Options/Accuracy

Sensor option	Sensor reference	Input ranges		Accuracy over range(s)	
		°C	°F	°C	°F
2- and 3-wire RTDs					
Pt 50 (α = 0.00391)	GOST 6651-94	–200 to 550	–328 to 1022	± 0.57	± 1.03
Pt 100 (α = 0.00391)	GOST 6651-94	–200 to 550	–328 to 1022	± 0.28	± 0.50
Pt 100 (α = 0.00385)	IEC 751; α = 0.00385, 1995	–200 to 850	–328 to 1562	± 0.30	± 0.54
Pt 100 (α = 0.003916)	JIS 1604, 1981	–200 to 645	–328 to 1193	± 0.30	± 0.54
Pt 200 (α = 0.00385)	IEC 751; α = 0.00385, 1995	–200 to 850	–328 to 1562	± 0.54	± 0.98
Pt 200 (α = 0.003916)	JIS 1604; α = 0.003916, 1981	–200 to 645	–328 to 1193	± 0.54	± 0.98
Pt 500	IEC 751; α = 0.00385, 1995	–200 to 850	–328 to 1562	± 0.38	± 0.68
Pt 1000	IEC 751; α = 0.00385, 1995	–200 to 300	–328 to 572	± 0.40	± 0.72
Ni 120	Edison curve no. 7	–70 to 300	–94 to 572	± 0.30	± 0.54
Cu 10	Edison copper winding no. 15	–50 to 250	–58 to 482	± 3.20	± 5.76
Cu 100 (a=428)	GOST 6651-94	–185 to 200	–301 to 392	± 0.48	±0.86
Cu 50 (a=428)	GOST 6651-94	–185 to 200	–301 to 392	± 0.96	±1.73
Cu 100 (a=426)	GOST 6651-94	–50 to 200	–58 to 392	± 0.48	±0.86
Cu 50 (a=426)	GOST 6651-94	–50 to 200	–58 to 392	± 0.96	±1.73
Thermocouples—cold junction adds + 0.5 °C to listed accuracy					
NIST Type B (Accuracy varies according to input range)	NIST Monograph 175	100 to 300 301 to 1820	212 to 572 573 to 3308	± 6.00 ± 1.54	± 10.80 ± 2.78
NIST Type E	NIST Monograph 175	–200 to 1000	–328 to 1832	± 0.40	± 0.72
NIST Type J	NIST Monograph 175	–180 to 760	–292 to 1400	± 0.70	± 1.26
NIST Type K	NIST Monograph 175	–180 to 1372	–292 to 2501	± 1.00	± 1.80
NIST Type N	NIST Monograph 175	–200 to 1300	–328 to 2372	± 1.00	± 1.80
NIST Type R	NIST Monograph 175	0 to 1768	32 to 3214	± 1.50	± 2.70
NIST Type S	NIST Monograph 175	0 to 1768	32 to 3214	± 1.40	± 2.52
NIST Type T	NIST Monograph 175	–200 to 400	–328 to 752	± 0.70	± 1.26
DIN L	DIN 43710	–200 to 900	–328 to 1652	± 0.70	± 1.26
DIN U	DIN 43710	–200 to 600	–328 to 1112	± 0.70	± 1.26
w5Re26/W26Re	ASTME 988-96	0 to 2000	32 to 3632	± 1.60	± 2.88
Type L	GOST R 8.585-2001	–200 to 800	–328 to 1472	± 0.71	±1.28
Terminal temperature		–50 to 85	–58 to 185	±0.50	±0.90
Millivolt input—Not approved for use with CSA Option Code I6		–10 to 100 mV		± 0.05 mV	
2- and 3-wire Ohm input		0 to 2000 ohms		± 0.90 ohm	
4–20 mA (Rosemount)[1]		4–20 mA		± 0.01 mA	
4–20 mA (NAMUR)[1]		4–20 mA		± 0.01 mA	

1. Requires the S002 option code.

Differential configuration notes

Differential capability exists between any two sensor types.

For all differential configurations, the input range is X to Y where

X = Sensor A minimum - Sensor B max.
Y = Sensor A maximum - Sensor B min.

Accuracy for differential configurations

If sensor types are similar (for example, both RTDs or both thermocouples), the accuracy = 1.5 times worst case accuracy of either sensor type. If sensor types are dissimilar (for example, one RTD and one thermocouple), the accuracy = Sensor 1 Accuracy + Sensor 2 Accuracy.

Analog sensors 4–20mA

Two types of alarm levels are available with 4–20 mA sensors on the Rosemount 848T. These types must be ordered with the S002 option code complete with an analog connector kit. The alarm levels, accuracy for each type are listed in Table 3.

Table 3. Analog Sensors

Sensor option	Alarm levels	Accuracy
4–20 mA (Rosemount standard)	3.9 to 20.8 mA	± 0.01 mA
4–20 mA (NAMUR)	3.8 to 20.5 mA	± 0.01 mA

Ambient temperature effect

Transmitters may be installed in locations where the ambient temperature is between –40 and 85 °C (–40 and 185 °F).

Table 4. Ambient Temperature Effects

NIST type	Accuracy per 1.0 °C (1.8 °F) change in ambient temperature[(1)(2)]	Temperature range (°C)
RTD		
Pt 50 (α = 0.00391)	0.004 °C (0.0072 °F)	N/A
Pt 100 (α = 0.00391)	0.002 °C (0.0036 °F)	N/A
Pt 100 (α = 0.00385)	0.003 °C (0.0054 °F)	N/A
Pt 100 (α = 0.003916)	0.003 °C (0.0054 °F)	N/A
Pt 200 (α = 0.003916)	0.004 °C (0.0072 °F)	N/A
Pt 200 (α = 0.00385)	0.004 °C (0.0072 °F)	N/A
Pt 500	0.003 °C (0.0054 °F)	N/A
Pt 1000	0.003 °C (0.0054 °F)	N/A
Cu 10	0.03 °C (0.054 °F)	N/A
Cu 100 (a = 428)	0.002 °C (0.0036 °F)	N/A
Cu 50 (a = 428)	0.004 °C (.0072 °F)	N/A
Cu 100 (a = 426)	0.002 °C (0.0036 °F)	N/A
Cu 50 (a = 426)	0.004 °C (.0072 °F)	N/A
Ni 120	0.003 °C (0.0054 °F)	N/A
Thermocouple (R = the value of the reading)		
Type B	0.014 °C 0.032 °C - (0.0025% of [R - 300]) 0.054 °C - (0.011% of [R - 100])	R ≥ 1000 300 ≤ R < 1000 100 ≤ R < 300
Type E	0.005 °C + (0.00043% of R)	All
Type J, DIN Type L	0.0054 °C + (0.00029% of R) 0.0054 °C + (0.0025% of |R|)	R ≥ 0 R < 0
Type K	0.0061 °C + (0.00054% of R) 0.0061 °C + (0.0025% of |R|)	R ≥ 0 R < 0
Type N	0.0068 °C + (0.00036% of R)	All
Type R, Type S	0.016 °C 0.023 °C - (0.0036% of R)	R ≥ 200 R < 200
Type T, DIN Type U	0.0064 °C 0.0064 °C - (0.0043% of |R|)	R ≥ 0 R < 0
GOST Type L	0.007 °C 0.007 °C + (0.003% of IRI)	R ≥ 0 R < 0
Millivolt	0.0005 mV	N/A
2- and 3-wire Ohm	0.0084 ohms	N/A
4–20 mA (Rosemount)	0.0001 mA	N/A
4-20 mA (NAMUR)	0.0001 mA	N/A

1. Change in ambient is in reference to the calibration temperature of the transmitter (20 °C [68 °F] typical from the factory).
2. Ambient temperature effect specification valid over minimum temperature span of 28 °C (50 °F).

Ambient temperature notes

Examples

When using a Pt 100 (α = 0.00385) sensor input at 30 °C ambient temperature:

- Ambient temperature effects: 0.003 °C $\times$ (30 – 20) = 0.03 °C
- Worst case error: Sensor accuracy + Ambient temperature effects = 0.30 °C + 0.03 °C = 0.33 °C
- Total probable error: $\sqrt{0.30^2 + 0.03^2} = 0.30\ ^\circ C$

Product Certifications

Rev 2.4

European Directive Information

A copy of the EU Declaration of Conformity can be found at the end of the Quick Start Guide. The most recent revision of the EU Declaration of Conformity can be found at Emerson.com/Rosemount.

Ordinary Location Certification

As standard, the transmitter has been examined and tested to determine that the design meets the basic electrical, mechanical, and fire protection requirements by FM Approvals, a nationally recognized test laboratory (NRTL) as accredited by the Federal Occupational Safety and Health Administration (OSHA).

North America

The US National Electrical Code® (NEC) and the Canadian Electrical Code (CEC) permit the use of Division marked equipment in Zones and Zone marked equipment in Divisions.The markings must be suitable for the area classification, gas, and temperature class. This information is clearly defined in the respective codes.

USA

I5 FM Intrinsically Safe and Nonincendive
Certificate: 3011568
Standards: FM Class 3600:1998, FM Class 3610:2010, FM Class 3611:2004, FM Class 3810:2005, ANSI/ISA 60079-0:2009, ANSI/ISA 60079-11:2009, NEMA 250:1991, IEC 60529:2011
Markings: IS CL I, DIV 1, GP A, B, C, D; T4(–50 °C ≤ T_a ≤ +60 °C); NI CL I, DIV 2, GP A, B, C, D; T4A(–50 °C ≤ T_a ≤ +85 °C); T5(–50 °C ≤ T_a ≤ +70 °C) when installed per Rosemount drawing 00848-4404

Note
Transmitters marked with Nonincendive CL I, DV 2 can be installed in Division 2 locations using general Division 2 wiring methods or Nonincendive Field Wiring (NIFW). See Drawing 00848-4404.

IE FM FISCO
Certificate: 3011568
Standards: FM Class 3600:1998, FM Class 3610:2010, FM Class 3611:2004, FM Class 3810:2005, ANSI/ISA 60079-0:2009, ANSI/ISA 60079-11:2009, NEMA 250:1991, IEC 60529:2011
Markings: IS CL I, DIV 1, GP A, B, C, D; T4(–50 °C ≤ T_a ≤ +60 °C); NI CL I, DIV 2, GP A, B, C, D; T4A(–50 °C ≤ T_a ≤ +85 °C); T5(–50 °C ≤ T_a ≤ +70 °C) when installed per Rosemount drawing 00848-4404

N5 Nonincendive and Dust-Ignitionproof
Certificate: 3011568
Standards: FM Class 3600:1998, FM Class 3611:2004, FM Class 3810:2005, ANSI/ISA 60079-0:2009, NEMA® 250:1991, IEC 60529:2011
Markings: NI CL I, DIV 2, GP A, B, C, D; DIP CL II/III, DIV 1, GP E, F, G; T4A(–50 °C ≤ T_a ≤ +85 °C); T5(–50 °C ≤ T_a ≤ +70 °C) when installed per Rosemount drawing 00848-4404; Type 4X

NK Nonincendive
Certificate: 3011568
Standards: FM Class 3600:1998, FM Class 3611:2004, FM Class 3810:2005, ANSI/ISA 60079-0:2009, NEMA 250:1991, IEC 60529:2001
Markings: NI CL I, DIV 2, GP A, B, C, D; T4A(–50 °C ≤ T_a ≤ +85 °C); T5(–50 °C ≤ T_a ≤ +70 °C) when installed per Rosemount drawing 00848-4404

Note
Only the N5 and NK are valid with the S002 option.

Table 5. Entity Parameters

FIELDBUS (input)	FISCO (input)	Nonincendive (input)	Sensor field terminal (output)
V_{MAX} = 30 V	V_{MAX} = 17.5	V_{MAX} = 42.4	V_{oc} = 12.5 V
I_{MAX} = 300 mA	I_{MAX} = 380 mA	C_i = 2.1 nF	I_{SC} = 4.8 mA
P_i = 1.3 W	P_i = 5.32 W	L_i = 0	P_o = 15 mW
C_i = 2.1 nF	C_i = 2.1 nF	N/A	C_A = 1.2 µF
L_i = 0	L_i = 0	N/A	L_A = 1 H

Canada

E6 CSA Explosionproof, Dust-Ignitionproof, Division 2 (JX3 Enclosure Required)
Certificate: 1261865
Standards: CAN/CSA C22.2 No. 0-M91 (R2001), CSA Std. C22.2 No. 25.1966, CSA Std. C22.2 No. 30-M1986, CAN/CSA C22.2 No. 94-M91, CSA Std. C22.2 No. 142-M1987, CSA Std. C22.2 No. 213-M1987, CSA Std. C22.2 No. 60529:05
Markings: Explosionproof for Class I, Division 1, Groups B, C, and D; T4(–40 °C ≤ T_a ≤+40 °C) when installed per Rosemount drawing 00848-1041; Dust-Ignitionproof for Class II, Division 1, Groups E, F, and G; Class III; Class I, Division 2, Groups A, B, C, and D; T3C(–50 ° C ≤ T_a ≤ +60 °C) when installed per Rosemount drawing 00848-4405; Conduit Seal Required

I6 CSA Intrinsically Safe and Division 2
Certificate: 1261865
Standards: CAN/CSA C22.2 No. 0-M91 (R2001), CAN/CSA C22.2 No. 94-M91, CSA Std. C22.2 No. 142-M1987, CSA Std. C22.2 No. 157-92, CSA Std. C22.2 No. 213-M1987, CSA Std. C22.2 No. 60529:05
Markings: Intrinsically Safe for Class I, Division 1, Groups A, B, C, and D; T3C(–50 °C ≤ T_a ≤ +60 °C) when installed per Rosemount drawing 00848-4405; Class I, Division 2, Groups A, B, C, D; T3C(–50 °C ≤ T_a ≤ +60 °C) when installed per Rosemount drawing 00848-4405

IF CSA FISCO
Certificate: 1261865
Standards: CAN/CSA C22.2 No. 0-M91 (R2001), CAN/CSA C22.2 No. 94-M91, CSA Std. C22.2 No. 142-M1987, CSA Std. C22.2 No. 157-92, CSA Std. C22.2 No. 213-M1987, CSA Std. C22.2 No. 60529:05
Markings: Intrinsically Safe for Class I, Division 1, Groups A, B, C, and D; T3C(–50 °C ≤ T_a ≤ +60 °C) when installed per Rosemount drawing 00848-4405; Class I, Division 2, Groups A, B, C, D; T3C(–50 °C ≤ T_a ≤ +60 °C) when installed per Rosemount drawing 00848-4405

N6 CSA Division 2 and Dust-Ignitionproof (enclosure required)
Certificate: 1261865
Standards: CAN/CSA C22.2 No. 0-M91 (R2001), CSA Std. C22.2 No. 30-M1986, CAN/CSA C22.2 No. 94-M91, CSA Std. C22.2 No. 142-M1987, CSA Std. C22.2 No. 213-M1987, CSA Std. C22.2 No. 60529:05
Markings: Class I, Division 2, Groups A, B, C, and D; T3C(–50 °C ≤ T_a ≤ +60 °C) when installed per Rosemount drawing 00848-4405; Dust-Ignitionproof for Class II, Division 1, Groups E, F, and G; Class III; Conduit Seal Required

Europe

I1 ATEX Intrinsic Safety
Certificate: Baseefa09ATEX0093X
Standards: EN 60079-0:2012, EN60079-11:2012
Markings: Ⓔx II 1 G Ex ia IIC T4 Ga (–50 °C ≤ T_a ≤ +60 °C) when installed per drawing 00848-4406

Special Conditions for Safe Use (X):

1. The equipment must be installed in an enclosure that provides a degree of protection of at least IP20. Non-metallic enclosures must be suitable to prevent electrostatic hazards and light alloy or zirconium enclosures must be protected from impact and friction when installed.
2. The equipment is not capable of withstanding the 500V insulation test required by EN 60079-11:2011, clause 6.3.13. This must be taken into account when installing the equipment.

Table 6. Entity Parameters

Fieldbus (input)	Sensor field terminal (output)
U_i = 30 V	U_o = 12.5 V
I_i = 300 mA	I_o = 4.8 mA
P_i = 1.3 W	P_o = 15 mW
C_i = 2.1 nF	C_o = 1.2 µF
L_i = 0	L_o = 1 H

IA ATEX FISCO Intrinsic Safety
Certificate: Baseefa09ATEX0093X
Standards: EN 60079-0:2012, EN60079-11:2012
Markings: Ⓔx II 1 G Ex ia IIC T4 Ga (–50 °C ≤ T_a ≤ +60 °C) when installed per drawing 00848-4406

Special Conditions for Safe Use (X):

1. The equipment must be installed in an enclosure that provides a degree of protection of at least IP20. Non-metallic enclosures must be suitable to prevent electrostatic hazards and light alloy or zirconium enclosures must be protected from impact and friction when installed.
2. The equipment is not capable of withstanding the 500 V insulation test required by EN 60079-11:2011, clause 6.3.13. This must be taken into account when installing the equipment.

Table 7. Entity Parameters

FISCO (input)	Sensor field terminal (output)
U_i = 17.5 V	U_o = 12.5 V
I_i = 380 mA	I_o = 4.8 mA
P_i = 5.32 W	P_o = 15 mW
C_i = 2.1 nF	C_o = 1.2 µF
L_i = 0	L_o = 1 H

N1 ATEX Type n (with enclosure)
Certificate: Baseefa09ATEX0095X
Standards: EN 60079-0:2006, EN60079-15:2005
Markings: Ⓔx II 3 G Ex nA nL IIC T5(–40 °C ≤ T_a ≤ +65 °C)

Special Conditions for Safe Use (X):

1. Provision must be made, external to the apparatus, to ensure the rated voltage of the apparatus supply is not exceeded by transient disturbances of more than 40%.
2. The electrical circuit is connected directly to earth; this must be taken into account when installing the apparatus.

NC ATEX Type n (without enclosure)
Certificate: Baseefa09ATEX0094U
Standards: EN 60079-0:2006, EN60079-15:2005
Markings: Ⓔx II 3 G Ex nA nL IIC T4(–50 °C ≤ T_a ≤ +85 °C), T5(–50 °C ≤ T_a ≤ +70 °C)

Schedule of Limitations (U):

1. The component must be installed in a suitable component certified enclosure that provides a degree of protection of at least IP54 and meets the relevant material and environmental requirements of EN 60079-0:2006 and EN 60079-15:2005.
2. Provision must be made, external to the apparatus, to ensure the rated voltage of the apparatus supply is not exceeded by transient disturbances of more than 40%.
3. The electrical circuit is connected directly to earth; this must be taken into account when installing the apparatus.

Note
The Rosemount 848T may also be installed in an external energy limited circuit as Ex nL IIC. In this case the following parameters apply:

Table 8. Entity Parameters

Power/bus (input)	Sensor field terminal (output)
U_i = 42.4 V	U_o = 12.5 V
C_i = 2.1 nF	I_o = 2.5 mA
L_i = 0	C_o = 1000 µF
N/A	L_o = 1 H

ND ATEX Dust
Certificate: BAS01ATEX1315X
Standards: EN 50281-1-1:1998
Markings: Ⓔx II 1 D T90 °C (–40 °C ≤ T_a ≤ +65 °C); IP66

Special Conditions for Safe Use (X):

1. The user must ensure that the maximum rated voltage and current (42.4 volts, 22 milliamps DC) are not exceeded. All connections to other apparatus or associated apparatus shall have control over this voltage and current equivalent to a category “ib” circuit according to EN 50020.
2. Component approved EEx e cable entries must be used which maintain the ingress protection of the enclosure to at least IP66.
3. Any unused cable entry holes must be filled with component approved EEx e blanking plugs.
4. The ambient temperature range of use shall be the most restrictive of the apparatus, cable gland or blanking plug.

International

I7 IECEx Intrinsic Safety
Certificate: IECEx BAS 09.0030X
Standards: IEC 60079-0:2011, IEC60079-11:2011
Markings: Ex ia IIC T4 Ga (–50 °C ≤ T_a ≤ +60 °C)

Special Conditions for Safe Use (X):

1. The apparatus must be installed in an enclosure that provides a degree of protection of at least IP20. Non-metallic enclosures must be suitable to prevent electrostatic hazards and light alloy or zirconium enclosures must be protected from impact and friction when installed.
2. The apparatus is not capable of withstanding the 500 V insulation test required by IEC 60079-11:2011, clause 6.3.13. This must be taken into account when installing the apparatus.

IG IECEx FISCO Intrinsic Safety
Certificate: IECEx BAS 09.0030X
Standards: IEC 60079-0:2011, IEC60079-11:2011
Markings: Ex ia IIC T4 Ga (–50 °C ≤ T_a ≤ +60 °C)

Special Conditions for Safe Use (X):

1. The equipment must be installed in an enclosure that provides a degree of protection of at least IP20. Non-metallic enclosures must be suitable to prevent electrostatic hazards and light alloy or zirconium enclosures must be protected from impact and friction when installed.
2. The equipment is not capable of withstanding the 500 V insulation test required by EN 60079-11:2012, clause 6.3.13. This must be taken into account when installing the equipment.

Table 9. Entity Parameters

FISCO (input)	Sensor field terminal (output)
U_i = 17.5 V	U_o = 12.5 V
I_i = 380 mA	I_o = 4.8 mA
P_i = 5.32 W	P_o = 15 mW
C_i = 2.1 nF	C_o = 1.2 µF
L_i = 0	L_o = 1 H

N7 IECEx Type n (with enclosure)
Certificate: IECEx BAS 09.0032X
Standards: IEC 60079-0:2004, IEC 60079-15:2005
Markings: Ex nA nL IIC T5(–40 °C ≤ T_a ≤ +65 °C)

Special Conditions for Safe Use (X):

1. Provision must be made, external to the apparatus, to ensure the rated voltage of the apparatus supply is not exceeded by transient disturbances of more than 40%.
2. The electrical circuit is connected directly to earth; this must be taken into account when installing the apparatus.

NJ IECEx Type n (without enclosure)
Certificate: IECEx BAS 09.0031U
Standards: IEC 60079-0:2004, IEC 60079-15:2005
Markings: Ex nA nL IIC T4(–50 °C ≤ T_a ≤ +85 °C), T5(–50 °C ≤ T_a ≤ +70 °C)

Schedule of Limitations (U):

1. The component must be installed in a suitable component certified enclosure that provides a degree of protection of at least IP54 and meets the relevant material and environmental requirements of EN 60079-0:2006 and EN 60079-15:2005.
2. Provision must be made, external to the apparatus, to ensure the rated voltage of the apparatus supply is not exceeded by transient disturbances of more than 40%.
3. The electrical circuit is connected directly to earth; this must be taken into account when installing the apparatus.

Brazil

I2 INMETRO Intrinsic Safety
Certificate: UL-BR 16.0086X
Standards: ABNT NBR IEC 60079-0:2008 + Errata 1:2011
ABNT NBR IEC 60079-11:2009
Markings: Ex ia IIC T4(–50 °C ≤ T_a ≤ +60 °C)

Special Conditions for Safe Use (X):

1. The apparatus must be installed in an enclosure that provides a degree of protection of at least IP20. Non-metallic enclosures must be suitable to prevent electrostatic hazards (see manufacturer's instructions manual) and light alloy or zirconium enclosures must be protected from impact and friction when installed.
2. The apparatus is not capable of withstanding the 500 V isolation test required by ABNT NBR IEC 60079-11. This must be taken into account when installing the apparatus --- see manufacturer's instructions manual.

Table 10. Entity Parameters

Fieldbus (input)	Sensor field terminal (output)
U_i = 30 V	U_o = 12.5 V
I_i = 300 mA	I_o = 4.8 mA
P_i = 1.3 W	P_o = 15 mW
C_i = 2.1 nF	C_o = 1.2 µF
L_i = 0	L_o = 1 H

IB INMETRO Intrinsic Safety
Certificate: UL-BR 16.0086X
Standards: ABNT NBR IEC 60079-0:2008 + Errata 1:2011
ABNT NBR IEC 60079-11:2009
Markings: Ex ia IIC T4(–50 °C ≤ T_a ≤ +60 °C)

Special Conditions for Safe Use (X):

1. The apparatus must be installed in an enclosure that provides a degree of protection of at least IP20. Non-metallic enclosures must be suitable to prevent electrostatic hazards (see manufacturer's instructions manual) and light alloy or zirconium enclosures must be protected from impact and friction when installed.
2. The apparatus is not capable of withstanding the 500 V isolation test required by ABNT NBR IEC 60079-11. This must be taken into account when installing the apparatus --- see manufacturer's instruction manual.

Table 11. Entity Parameters

FISCO (input)	Sensor field terminal (output)
U_i = 17.5 V	U_o = 12.5 V
I_i = 380 mA	I_o = 4.8 mA
P_i = 5.32 W	P_o = 15 mW
C_i = 2.1 nF	C_o = 1.2 µF
L_i = 0	L_o = 1 H

China

I3 NEPSI Intrinsic Safety
Certificate: GYJ16.1205X
Standards: GB3836.1-2010, GB3836.4-2010, GB3836.20-2010
Markings: Ex ia IIC T4/T5 Ga

Special Conditions for Safe Use (X):

1. Only when temperature transmitter is installed in IP 20(GB4208-2008) housing, can it be used in a hazardous location. Metallic housing should observe the requirements of GB3836.1-2010 Clause 8. Non-metallic housing should observe the requirements of GB3836.1-2010 Clause 7.3.
2. This apparatus is not capable of withstanding the 500 V rms insulation test required by Clause 6.4.12 of GB3836.4-2010.
3. The ambient temperature range of the equipment is T4(−50 °C ≤ T_a ≤ +60 °C).
4. Parameters:

Terminals of power/loop (1-2)					
Output	Maximum output voltage:	Maximum output current:	Maximum output power:	Maximum external parameters:	
	U_o(V)	I_o(mA)	P_o(mW)	C_o(μF)	L_o(H)
F	30	300	1.3	2.1	0
F (FISCO)	17.5	380	5.32	2.1	0

Note
Non-FISCO parameters listed above must be derived from a linear supply with a resistance limited output.

Terminals of sensor						
Output	Terminals	Maximum output voltage:	Maximum output current:	Maximum output power:	Maximum external parameters:	
		U_o(V)	I_o(mA)	P_o(mW)	C_o(μF)	L_o(H)
F	1-8	30	300	1.3	2.1	0

5. The product complies to the requirements for FISCO field devices specified in IEC60079-27: 2008. For the connection of an intrinsically safe circuit in accordance FISCO model, FISCO parameters of this product are as above.
6. The product should be used with Ex-certified associated apparatus to establish explosion protection system that can be used in explosive gas atmospheres. Wiring and terminals should comply with the instruction manual of the product and associated apparatus.
7. The cables between this product and associated apparatus should be shielded cables (the cables must have insulated shield). The shielded cable has to be grounded reliably in non-hazardous area.
8. End users are not permitted to change any component's insides, but to settle the problem, in conjunction with manufacturer to avoid damage to the product.
9. During installation, use and maintenance of this product, observe following standards:
GB3836.13-2013 “Electrical apparatus for explosive gas atmospheres Part 13: Repair and overhaul for apparatus used in explosive gas atmospheres”
GB3836.15-2000 “Electrical apparatus for explosive gas atmospheres Part 15: Electrical installations in hazardous area (other than mines)”
GB3836.16-2006 “Electrical apparatus for explosive gas atmospheres Part 16: Inspection and maintenance of electrical installation (other than mines)”
GB3836.18-2010 “Explosive Atmospheres Part 18: Intrinsically Safe System”
GB50257-2014 “Code for construction and acceptance of electric device for explosion atmospheres and fire hazard electrical equipment installation

N3 NEPSI Type n
Certificate: GYJ17.1008U
Standards: GB3836.1-2010, GB3836.8-2014
Markings: Ex nA nL IIC T4/T5 Gc

Schedule of Limitations (U):

1. This component is not capable of withstanding the 500 V electrical strength test defined in Clause 6.5.1 of GB3836.8-2014. The must be taken into account during installation.
2. This component must be housed in a suitable component certified enclosure that provides a degree of protection of at least IP54 and meets the relevant material and environmental requirements of GB3836.1-2010 and GB3836.8-2014.
3. Provision must be made, external to the component, to ensure the rated voltage of the component supply is not exceeded by transient disturbances of more the 40%.
4. The ambient temperature range is:

T code	Ambient temperature
T4	−50 °C ≤ T_a ≤ +85 °C
T5	−50 °C ≤ T_a ≤ +70 °C

5. Maximum input voltage: 42.4 V.
6. End users are not permitted to change any components inside, but to settle the problem in conjunction with manufacturer to avoid damage to the product.
7. During installation, use and maintenance of this product, observe the following standards:
GB3836.13-2013 “Electrical apparatus for explosive gas atmospheres Part 13: Repair and overhaul for apparatus used in explosive gas atmospheres”
GB3836.15-2000 “Electrical apparatus for explosive gas atmospheres Part 15: Electrical installations in hazardous area (other than mines)”

GB3836.16-2006 “Electrical apparatus for explosive gas atmospheres Part 16: Inspection and maintenance of electrical installation (other than mines)”
GB50257-2014 “Code for construction and acceptance of electric device for explosion atmospheres and fire hazard electrical equipment installation engineering”

Japan

I4 TIIS FISCO Intrinsic Safety (ia)
Certificate: TC19713
Markings: ia IIC T4

TIIS Wi-HART Intrinsic Safety (ia)
Certificate: TC19154
Markings: ia IIC T4

H4 TIIS FISCO Intrinsic Safety (ib)
Certificate: TC20737
Markings: ia IIC T4

Korea

IP Korea Intrinsic Safety
Certificate: 10-KB4BO-0088X
Markings: Ex ia IIC T4 (–50 °C ≤ T_a ≤ +60 °C)

EAC - Belarus, Kazakhstan, Russia

IM Technical Regulation Customs Union (EAC) Intrinsic Safety
Standards: GOST R IEC 60079-0-2011,
GOST R IEC 60079-11-2010
Markings: [FOUNDATION Fieldbus]: 0Ex ia IIC T4 Ga X

Special Condition for Safe Use (X):

1. See certificate for special conditions.

Combinations

KG Combination of I1/IA, I5/IE, I6/IF, and I7/IG

Conduit Plugs and Adapters

ATEX Flameproof and Increased Safety
Certificate: FM13ATEX0076X
Standards: EN 60079-0:2012, EN 60079-1:2007,
IEC 60079-7:2007
Markings: Ex 2 G Ex de IIC Gb

Special Conditions for Safe Use (X):

1. When the thread adapter or blanking plug is used with an enclosure in type of protection increased safety “e” the entry thread shall be suitably sealed in order to maintain the ingress protection rating (IP) of the enclosure.
2. The blanking plug shall not be used with an adapter.
3. Blanking Plug and Threaded Adapter shall be either NPT or Metric thread forms. G1/2 and PG 13.5 thread forms are only acceptable for existing (legacy) equipment installations.

IECEx Flameproof and Increased Safety
Certificate: IECEx FMG 13.0032X
Standards: IEC 60079-0:2011, IEC 60079-1:2007,
IEC 60079-7:2006-2007
Markings: Ex de IIC Gb

Special Conditions for Safe Use (X):

1. When the thread adapter or blanking plug is used with an enclosure in type of protection increased safety “e” the entry thread shall be suitably sealed in order to maintain the ingress protection rating (IP) of the enclosure.
2. The blanking plug shall not be used with an adapter.
3. Blanking Plug and Threaded Adapter shall be either NPT or Metric thread forms. G1/2 and PG 13.5 thread forms are only acceptable for existing (legacy) equipment installations.

Table 12. Conduit Plug Thread Sizes

Thread	Identification mark
M20 × 1.5	M20
1/2 - 14 NPT	1/2 NPT
G1/2	G1/2

Table 13. Thread Adapter Thread Sizes

Male thread	Identification mark
M20 ×1.5 – 6H	M20
1/2 –14 NPT	1/2 –14 NPT
3/4–14 NPT	3/4–14 NPT
Female thread	**Identification mark**
M20 × 1.5 – 6H	M20
1/2–14 NPT	1/2 –14 NPT
PG 13.5	PG 13.5

Additional Certifications

SBS American Bureau of Shipping (ABS) Type Approval
Certificate: 011-HS771994C-1-PDA
ABS Rules: 2013 Steel Vessels Rules 1-1-4/7.7, 1-1-Appendix 3, 4-8-3/1.7, 4-8-3/13.1

SBV Bureau Veritas (BV) Type Approval
Certificate: 26325/A3 BV
Requirements: Bureau Veritas Rules for the Classification of Steel Ships
Application: Class notations: AUT-UMS, AUT-CCS, AUT-PORT and AUT-IMS

SDN Det Norske Veritas (DNV) Type Approval
Certificate: A-14187
Intended Use: Det Norske Veritas' Rules for Classification of Ships, High Speed & Light Craft and Det Norske Veritas' Offshore Standards

Application:

Location classes	
Temperature	D
Humidity	B
Vibration	A
EMC	A
Enclosure	B/IP66: Al C/IP66: SST

SLL Lloyds Register (LR) Type Approval
Certificate: 11/60002 (E2)
Application: Environmental categories ENV1, ENV2, ENV2 and ENV5

Dimensional Drawings

Junction boxes with no entries (option codes JP1, JA1, and JS1) – external dimensions are the same as those outlined for the other junction box materials in this section.

Figure 2. Rosemount 848T

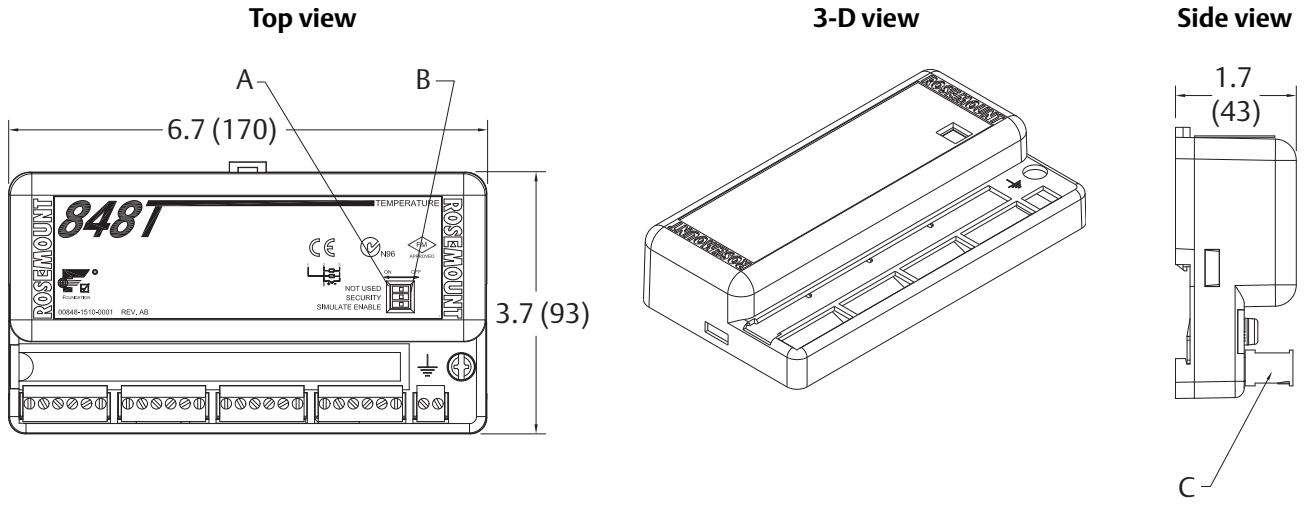

A. Security switch
B. Simulation switch
C. Removable wiring connection
Dimensions are in inches (millimeters).

Figure 3. Aluminum/Plastic Junction Box—Cable Gland (Option Codes JA2 and JP2)

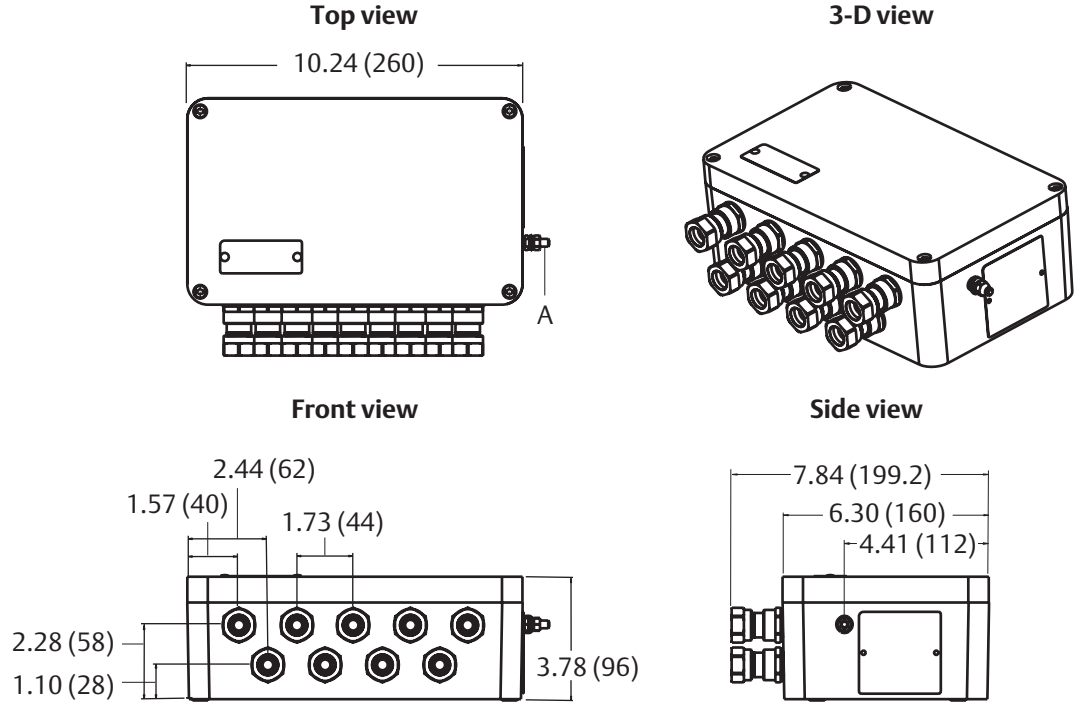

A. Ground screw
Dimensions are in inches (millimeters).

Figure 4. Stainless Steel Junction Box—Cable Gland (Option Code JS2)

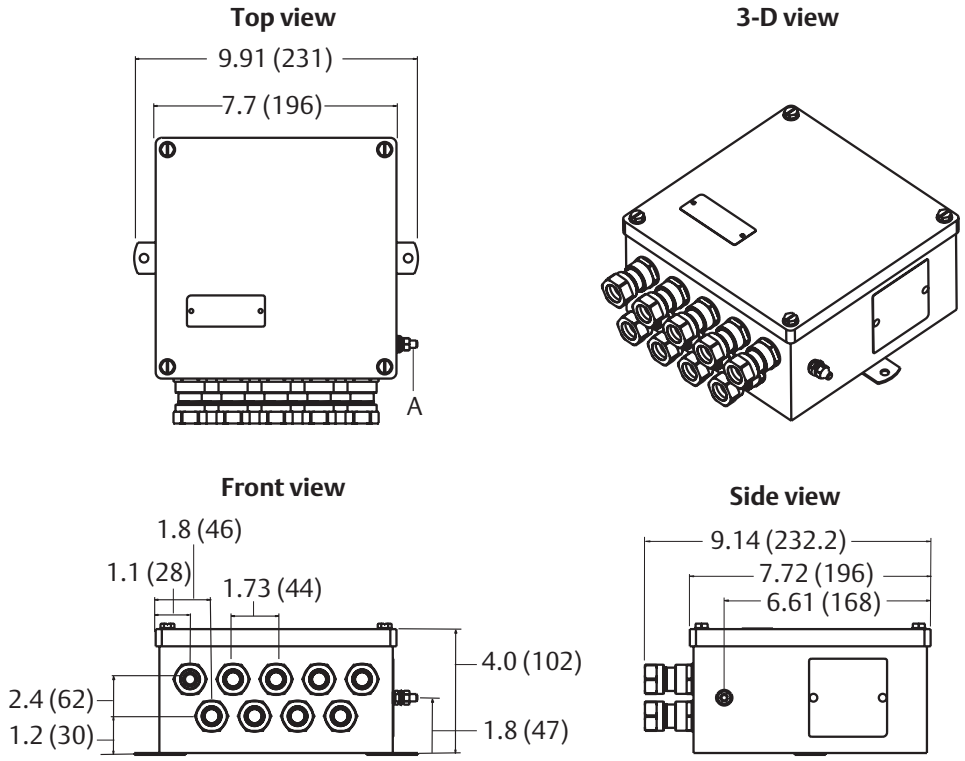

A. Ground screw
Dimensions are in inches (millimeters).

Figure 5. Aluminum/Plastic Junction Box—Conduit Entry (Option Codes JA3 and JP3)

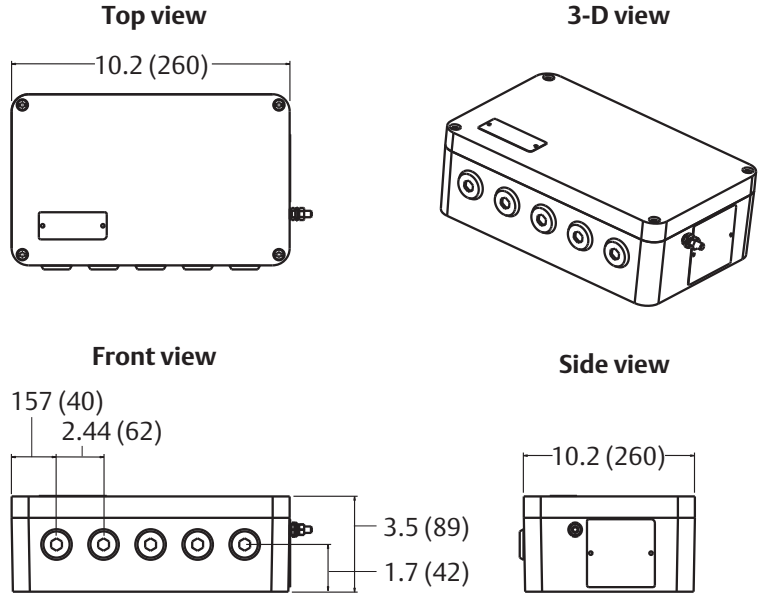

A. Five plugged 0.86-in. diameter holes suitable for installing 1/2-in. NPT fittings
Dimensions are in inches (millimeters).

Figure 6. Stainless Steel Junction Box—Conduit Entry (Option Code JS3)

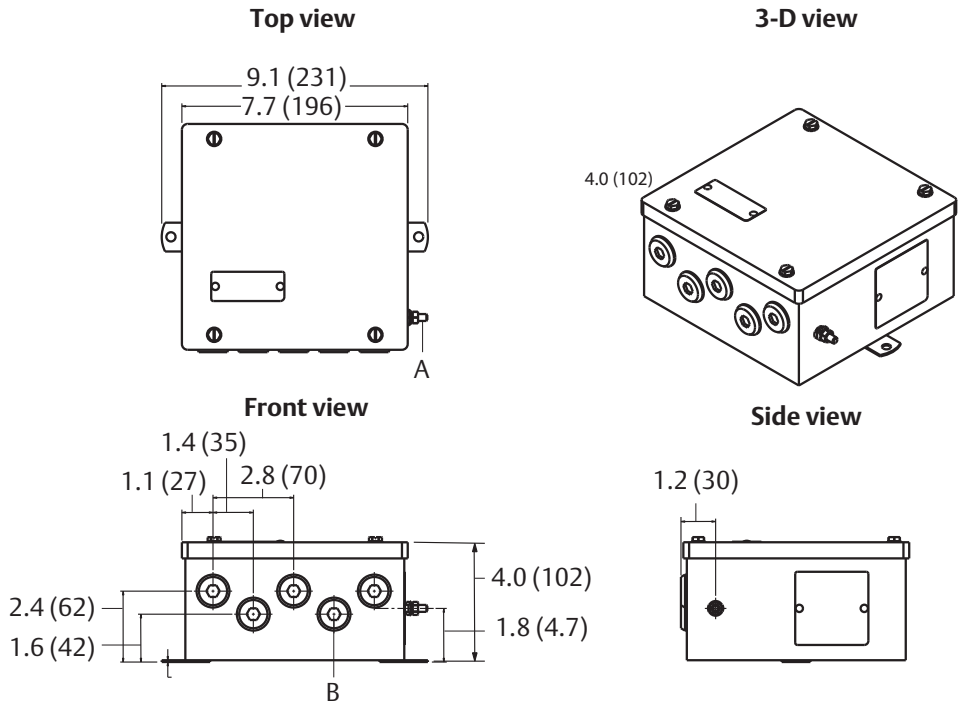

A. Ground screw
B. Five Plugged 0.86-in. diameter holes suitable for installing 1/2-in. NPT fittings
Dimensions are in inches (millimeters).

Mounting options

Figure 7. Aluminum/Plastic Junction Box (Styles JA and JP)

Front view **Side view**

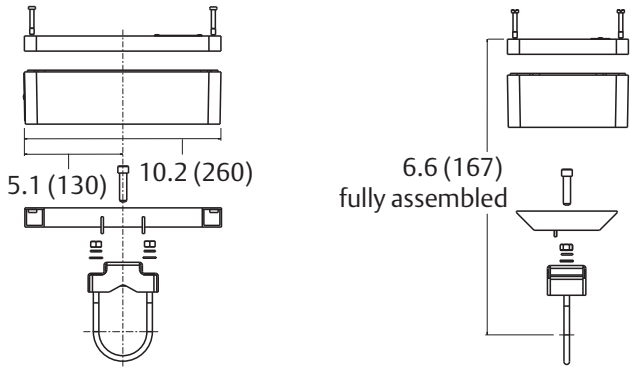

Dimensions are in inches (millimeters).

Figure 8. Stainless Steel Junction Box (Style JS)

Front view **Side view**

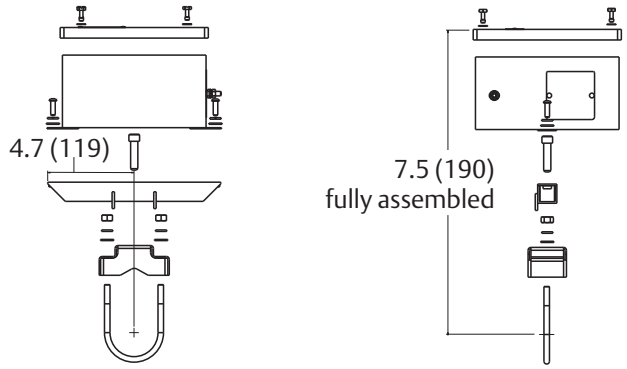

Dimensions are in inches (millimeters).

Figure 9. Mounted on Vertical Pipe

Aluminum/plastic junction box **Stainless steel junction box**

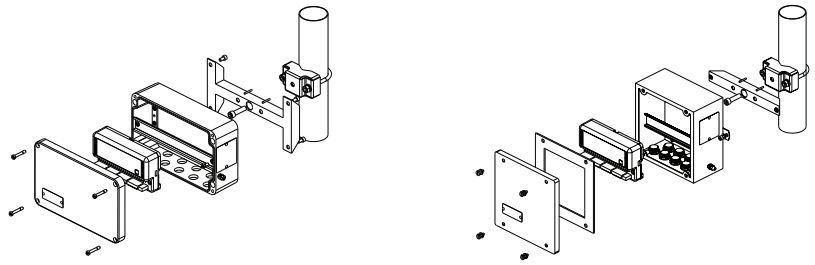

Rosemount 848T Wireless Temperature Transmitter

The Rosemount 848T is the premier choice for Wireless High Density measurements. Four independently configurable inputs are transmitted through *Wireless*HART. Costs per point are dramatically reduced through the use of smart wireless networks, with the same reliability and security of wired solutions. Additionally, the field hardened enclosure is suitable for installation in IS areas. Capabilities include:

Four independently configurable inputs, including 2-, 3- and 4-wire RTDs, thermocouples, 0-1000mV and 0-10V, 2-, 3- and 4-wire ohms, and 4-20 mA signals.

- Intrinsically safe, long lasting power module, which utilizes Emerson's SmartPower Technology
- Configurable high and low alerts to improve process performance
- Easy to use Device Dashboard, used to configure, monitor, and troubleshoot the Rosemount 848T

Specification and selection of product materials, options, or components must be made by the purchaser of the equipment.
See page 28 for more information on Material Selection.

Table 14. Rosemount 848T Wireless Transmitter Ordering Table
The starred offerings (★) represent the most common options and should be selected for best delivery. The non-starred offerings are subject to additional delivery lead time.

Model	Product description	
848T	High density temperature measurement family	
Transmitter output		
X	Wireless	★
Product certifications		
I1	ATEX Intrinsic Safety	★
I2	INMETRO Intrinsic Safety	★
I3	NEPSI Intrinsic Safety	★
I4	TIIS Intrinsic Safety	★
I5	FM Intrinsically Safe	★
I6	CSA Intrinsically Safe	★
I7	IECEx Intrinsic Safety	★
N5	FM Class I, Division 2, and Dust Ignition-proof (enclosure required)	★
N6	CSA Class I, Division 2	★
IM	Technical Regulations Customs Union (EAC) Intrinsic Safety	★
NA	No Approval	★
Input type		
S001	RTD, thermocouple, mV, Ohm Inputs	★
S002[(1)]	RTD, thermocouple, mV, Ohm and 4–20 mA inputs	★
S003	RTD, thermocouple, Ohm, mV, and 2 - dual channel voltage adapters	★
S004[(2)]	RTD, thermocouple, Ohm, mV, and 1 - dual channel voltage adapters	★

Table 14. Rosemount 848T Wireless Transmitter Ordering Table
The starred offerings (★) represent the most common options and should be selected for best delivery. The non-starred offerings are subject to additional delivery lead time.

Options (include with selected model number)

Wireless burst rate, operating frequency and protocol[3]		
WA3	User configurable update rate, 2.4 GHz DSSS, IEC 62591 (*Wireless*HART)	★
Omni-directional wireless antenna and SmartPower[4]		
WK1	External antenna, adapter for black power module (I.S. power module sold separately)[5]	★
WM1	Extended range, external antenna, adapter for black power module (I.S. power module sold separately)[5]	★
Mounting bracket		
B6	Mounting bracket for 2-in. pipe mounting - SST bracket and bolts	★
Enclosure options[6]		
HA1	Aluminum with cable glands (5 × 1/2-in. NPT for 7.5 - 11.9 mm)	★
HA2	Aluminum with conduit entries (5 plugged holes, suitable for installing 1/2-in. NPT fittings)	★
Software configuration		
C1	Custom configuration of date, descriptor, message and wireless parameters (required CDS with order)	★
Line filter		
F5	50 Hz line voltage filter	★
5-point calibration		
C4	5-point calibration (requires Q4 option code to generate a calibration certificate)	
Calibration certificate		
Q4	Calibration certificate (3-point calibration)	★
Shipboard certification		
SBV	Bureau Veritas (BV) type approval	★
Extended product warranty		
WR3	3-year limited warranty	★
WR5	5-year limited warranty	★
Typical model number: 848T X I5 S001 WA3 WK1 B6 HA1		

1. Only available with product certifications NA and N5. Stable resistors included.
2. Dual channel voltage adapter will be installed on channels 1 and 2.
3. Required for wireless.
4. WK1 or WM1 required for wireless.
5. Black power module must be shipped separately, order Model 701PBKKF or Part# 00753-9220-0001.
6. HA1 or HA2 required for wireless.

*Wireless*HART... the Industry Standard

Self-organizing, adaptive mesh routing

- No wireless expertise required, devices automatically find the best communication paths.
- Network continuously monitors paths for degradation and repairs itself.
- Adaptive behavior provides reliable, hands-off operation and simplifies network deployments, expansion and reconfiguration.
- Supports both star and mesh topologies.

Industry standard radio with channel hopping

- Standard IEEE 802.15.4 radios
- 2.4 GHz ISM band sliced into 16 radio-channels.
- Continually "hop" across channels to avoid interference and increase reliability.
- Frequency hopping spread spectrum (FHSS) technology delivers high reliability in challenging radio environment.

Self-healing network

- If an obstruction is introduced into the mesh network, devices will automatically find the best alternate communication path.
- This allows the network to instantly change to the new path without any loss in data.

Seamless integration to existing hosts

- Transparent and seamless integration.
- Same control system applications.
- Gateways connect using industry protocols.

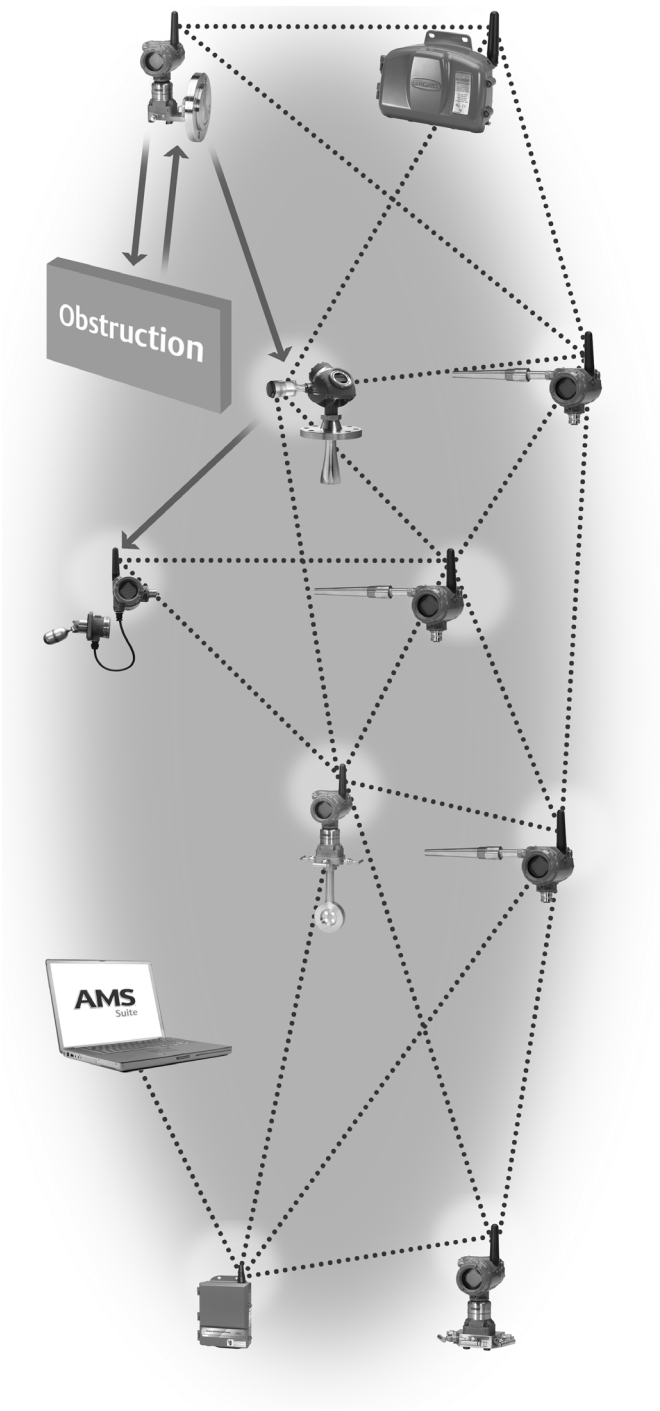

Specifications

Functional specifications

Input

Four independently configurable input channels that supports Thermocouple, RTD, mV, 0-10 V, ohm, and 4–20 mA, input types. See "Accuracy" on page 30 for sensor options.

Output

IEC 62591 (*Wireless*HART), 2.4 GHz DSSS

Ambient temperature limits

–40 to 85 °C (–40 to 185 °F)

Humidity limits

0–99% non-condensing relative humidity

Update rate

User selectable, 4 sec to 60 min.

Accuracy

(Pt 100 @ reference condition: 20 °C)
±0.30 °C (±0.54 °F)
For the complete list see "Accuracy" on page 30.

Isolation

Isolation between all sensor channels is rated to 10 Vdc over all operating conditions. No damage will occur to the device with up to 250 Vdc between any sensor channels.

Alerts

Message sent when open or short sensor is detected

Electromagnetic Compatibility (EMC)

- Meets the criteria under European Union Directive 2004/108/EC
- Meets all relevant requirements of EN 61326

Transmitter stability

- ±0.15% of reading or 0.15 °C (0.27 °F), whichever is greater, for 2 years for RTDs
- ±0.15% of reading or 0.15 °C (0.27 °F), whichever is greater, for 1 year for thermocouples

Self calibration

The analog-to-digital measurement circuitry automatically self-calibrates for each temperature update by comparing the dynamic measurement to extremely stable and accurate internal reference elements.

Vibration effect

Tested to the following with no effect on performance per IEC 60770-1, 1999.

Frequency acceleration	
10-60 Hz	0.21 mm peak displacement
60-2000 Hz	3 g

Physical specifications

Material selection

Emerson provides a variety of Rosemount product with various product options and configurations including materials of construction that can be expected to perform well in a wide range of applications. The Rosemount product information presented is intended as a guide for the purchaser to make an appropriate selection for the application. It is the purchaser's sole responsibility to make a careful analysis of all process parameters (such as all chemical components, temperature, pressure, flow rate, abrasives, contaminants, etc.), when specifying product, materials, options and components for the particular application. Emerson is not in a position to evaluate or guarantee the compatibility of the process fluid or other process parameters with the product, options, configuration or materials of construction selected.

Conformance to specifications (±3σ [Sigma])

Technology leadership, advanced manufacturing techniques, and statistical process control ensure specification conformance to at least ±3σ.

Electrical connections

Power module

The Emerson SmartPower Power Module is field replaceable, featuring keyed connections that eliminate the risk of incorrect installation. The power module is an Intrinsically Safe solution, containing the Lithium-thionyl chloride with a polybutadine terephthalate (PBT) enclosure. The 848T Wireless has a power module life time rating of six years with a one-minute update rate, at reference conditions.[1]

1. *Reference conditions are 68 °F (20 °C), and routing data for three additional network devices.*
Note: Continuous exposure to ambient temperature limits (-40 °F or 185 °F) (-40 °C or 85 °C) may reduce specified life to less than 20 percent.

Sensor terminals

Sensor terminals permanently fixed to terminal block

Field Communicator connections

Communication terminals

Clips permanently fixed to terminal block

Materials of construction

Enclosure

Housing - Low-copper aluminum
Paint - Polyurethane
Cover O-ring - Silicone

Terminal Block and Power Module

PBT

Antenna

PBT/Polycarbonate (PC) integrated omni-directional antenna

Mounting

Transmitter can be panel mounted, or be mounted onto a 2-in. pipe stand (with option code B6). Sensors must be remotely mounted, as transmitter conduit entries are not designed for direct sensor mounting.

Weight

Rosemount 848T Wireless - 4.75 lb. (2.15 kg)

Enclosure ratings (Rosemount 848T Wireless)

Housing option codes HA1 or HA2 are Type 4x and IP66.

Sensor connections

Figure 10. Rosemount 848T Wireless Sensor Connections Diagram

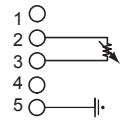

2-wire RTD and Ω

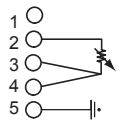

3-wire RTD and Ω

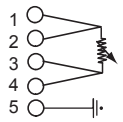

4-wire RTD and Ω

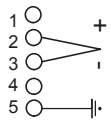

Thermocouple and mV

Optional voltage adapter

The Rosemount 848T Wireless voltage adapter allows voltage measurement from 0-10 volts. For this capability, one or two adapters are required. Each adapter accommodates 2 voltage inputs, and can be installed interchangeably on inputs 1 and 2 or 3 and 4.

The divider is ordered using option codes S003 or S004, and can also be purchased as a spare part.

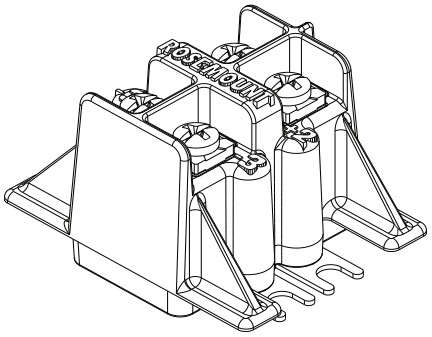

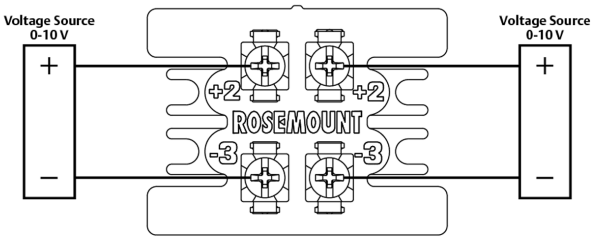

Accuracy

Sensor option	Sensor reference	Input ranges		Accuracy over range(s)	
		°C	°F	°C	°F
2-, 3-, and 4-wire RTDs					
Pt 50 (α = 0.00391)	GOST 6651-94	–200 to 550	–328 to 1022	± 0.57	± 1.03
Pt 100 (α = 0.00391)	GOST 6651-94	–200 to 550	–328 to 1022	± 0.28	± 0.50
Pt 100 (α = 0.00385)	IEC 751; α = 0.00385, 1995	–200 to 850	–328 to 1562	± 0.30	± 0.54
Pt 100 (α = 0.003916)	JIS 1604, 1981	–200 to 645	–328 to 1193	± 0.30	± 0.54
Pt 200 (α = 0.00385)	IEC 751; α = 0.00385, 1995	–200 to 850	–328 to 1562	± 0.54	± 0.98
PT 200 (α = 0.003916)	JIS 1604, 1981 (α = 0.003916)	–200 to 645	–328 to 1193	± 0.54	± 0.98
Pt 500 (α = 0.00385)	IEC 751; α = 0.00385, 1995	–200 to 850	–328 to 1562	± 0.38	± 0.68
Pt 1000 (α = 0.00385)s	IEC 751; α = 0.00385, 1995	–200 to 300	–328 to 572	± 0.40	± 0.72
Ni 120	Edison Curve No. 7	–70 to 300	–94 to 572	± 0.30	± 0.54
Cu 10	Edison Copper Winding No. 15	–50 to 250	–58 to 482	± 3.20	± 5.76
Cu 100 (a=428)	GOST 6651-94	–185 to 200	–301 to 392	± 0.48	±0.86
Cu 50 (a=428)	GOST 6651-94	–185 to 200	–301 to 392	± 0.96	±1.73
Cu 100 (a=426)	GOST 6651-94	–50 to 200	–58 to 392	± 0.48	±0.86
Cu 50 (a=426)	GOST 6651-94	–50 to 200	–58 to 392	± 0.96	±1.73
Thermocouples—cold junction adds + 0.5 °C to listed accuracy					
NIST Type B (Accuracy varies according to input range)	NIST Monograph 175	100 to 300 301 to 1820	212 to 572 573 to 3308	± 6.00 ± 1.54	± 10.80 ± 2.78
NIST Type E	NIST Monograph 175	–200 to 1000	–328 to 1832	± 0.40	± 0.72
NIST Type J	NIST Monograph 175	–180 to 760	–292 to 1400	± 0.70	± 1.26
NIST Type K	NIST Monograph 175	–180 to 1372	–292 to 2502	± 1.00	± 1.80
NIST Type N	NIST Monograph 175	–200 to 1300	–328 to 2372	± 1.00	± 1.80
NIST Type R	NIST Monograph 175	0 to 1768	32 to 3214	± 1.50	± 2.70
NIST Type S	NIST Monograph 175	0 to 1768	32 to 3214	± 1.40	± 2.52
NIST Type T	NIST Monograph 175	–200 to 400	–328 to 752	± 0.70	± 1.26
DIN L	DIN 43710	–200 to 900	–328 to 1652	± 0.70	± 1.26
DIN U	DIN 43710	–200 to 600	–328 to 1112	± 0.70	± 1.26
w5Re/W26Re	ASTME 988-96	0 to 2000	32 to 3632	± 1.60	± 2.88
Type L	GOST R.8.585-2001	–200 to 800	–328 to 1472	±0.71	±1.28
Terminal Temperature		–50 to 85	–58 to 185	±3.50	±6.30
Input units					
Ohm Input		0 to 2000 ohms		±0.90 ohms	
Millivolt Input		–10 to 100 mV		±0.05 mV	
1000 mV input		–10 to 1000 mV		±1.0 mV	
1000 mV input		0 to 10 V		greater of ±10 mV or 0.2% of span	
4–20 mA (Rosemount)[1]		4–20 mA		±0.01 mA	
4–20 mA (NAMUR)[1]		4–20 mA		±0.01 mA	

1. Requires the S002 option code.

Analog sensors 4–20mA

Two types of alarm levels are available with 4-20 mA sensors on the Rosemount 848T. These types must be ordered with the S002 option code complete with an analog connector kit. The alarm levels, accuracy for each type are listed in Table 15.

Table 15. Analog Sensors

Sensor option	Alarm levels	Accuracy
4–20 mA (Rosemount Standard)	3.9 to 20.8 mA	± 0.01 mA
4–20 mA (NAMUR)	3.8 to 20.5 mA	± 0.01 mA

Ambient temperature effect

Transmitters may be installed in locations where the ambient temperature is between –40 and 85 °C (–40 and 185 °F).

NIST type	Accuracy per 1.0 °C (1.8 °F) change in ambient temperature[1][2]	Temperature range (°C)
RTD		
Pt 50 (α = 0.003910)	0.004 °C (0.0072 °F)	N/A
Pt 100 (α = 0.00391)	0.002 °C (0.0036 °F)	N/A
Pt 100 (α = 0.00385)	0.003 °C (0.0054 °F)	N/A
Pt 100 (α = 0.003916)	0.003 °C (0.0054 °F)	N/A
Pt 200 (α = 0.00385)	0.004 °C (0.0072 °F)	N/A
PT 200 (α = 0.003916)	0.004 °C (0.0072 °F)	N/A
Cu 10	0.03 °C (0.054 °F)	N/A
Pt 500	0.003 °C (0.0054 °F)	N/A
Pt 1000	0.003 °C (0.0054 °F)	N/A
Cu 100 (a=428)	0.002 °C (0.0036 °F)	N/A
Cu 50 (a=428)	0.004 °C (.0072 °F)	N/A
Cu 100 (a=426)	0.002 °C (0.0036 °F)	N/A
Cu 50 (a=426)	0.004 °C (.0072 °F)	N/A
Ni 120	0.003 °C (0.0054 °F)	N/A
Thermocouple (R = the value of the reading)		
Type B	0.014 °C 0.032 °C - (0.0025% of [R - 300]) 0.054 °C - (0.011% of [R - 100])	R ≥ 1000 300 ≤ R < 1000 100 ≤ R < 300
Type E	0.005 °C + (0.00043% of R)	All
Type J, Din Type L	0.0054 °C + (0.00029% of R) 0.0054 °C + (0.0025% of |R|)	R ≥ 0 R < 0
Type K	0.0061 °C + (0.00054% of R) 0.0061 °C + (0.0025% of |R|)	R ≥ 0 R < 0
Type N	0.0068 °C + (0.00036% of R)	All
Type R, Type S	0.016 °C 0.023 °C - (0.0036% of R)	R ≥ 200 R < 200
Type T, DIN Type U	0.0064 °C 0.0064 °C - (0.0043% of |R|)	R ≥ 0 R < 0
GOST Type L	0.007 °C 0.007 °C + (0.003% of IRI)	R ≥ 0 R < 0
Input units		
Ohm input	0.0084 ohms	N/A
100 mV Input	0.0005 mV	N/A
1000 mV Input	0.005 mV	N/A
4–20 mA (Rosemount)	0.0001 mA	N/A
4–20 mA (NAMUR)	0.0001 mA	N/A

1. Change in ambient is in reference to the calibration temperature of the transmitter (20 °C [68 °F] typical from the factory).
2. Ambient temperature effect specification valid over minimum temperature span of 28 °C (50 °F).

Ambient temperature notes

Examples

When using a Pt 100 (α = 0.00385) sensor input at 30 °C ambient temperature, temperature effects would be:

- Ambient temperature effects: 0.003 °C $\times$(30 - 20) = 0.03 °C
- Worst case error: Sensor accuracy + Ambient temperature effects = 0.30 °C + 0.03 °C = 0.33 °C
- Total probable error: $\sqrt{0.30^2 + 0.03^2} = 0.30$ °C

Product Certifications

Rev 1.4

Telecommunication Compliance

All wireless devices require certification to ensure that they adhere to regulations regarding the use of the RF spectrum. Nearly every country requires this type of product certification.

Emerson is working with governmental agencies around the world to supply fully compliant products and remove the risk of violating country directives or laws governing wireless device usage.

FCC and IC

This device complies with Part 15 of the FCC Rules. Operation is subject to the following conditions: This device may not cause harmful interference. This device must accept any interference received, including interference that may cause undesired operation. This device must be installed to ensure a minimum antenna separation distance of 20 cm from all persons.

European Directive Information

A copy of the EU Declaration of Conformity can be found at the end of the Quick Start Guide. The most recent revision of the EU Declaration of Conformity can be found at Emerson.com/Rosemount.

Ordinary Location Certification

As standard, the transmitter has been examined and tested to determine that the design meets the basic electrical, mechanical, and fire protection requirements by a nationally recognized test laboratory (NRTL) as accredited by the Federal Occupational Safety and Health Administration (OSHA).

North America

The US National Electrical Code (NEC) and the Canadian Electrical Code (CEC) permit the use of Division marked equipment in Zones and Zone marked equipment in Divisions. The markings must be suitable for the area classification, gas, and temperature class. This information is clearly defined in the respective codes.

USA

I5 FM Intrinsically Safe
Certificate: 303437
Standards: FM Class 3600:1998, FM Class 3610:2010, FM Class 3810:2005, NEMA-250:1997, ANSI/ISA-60079-0:2009, ANSI/ISA-60079-11:2009, IEC 60529:2004
Markings: IS CL I, DIV 1, GP A, B, C, D; NI CL I, DIV 2, GP A, B, C, D; IS CL I, Zone 0, AEx ia IIC T4(–50 °C ≤ T_a ≤ +70 °C), when installed per Rosemount drawing 00849-1000; Type 4X; IP66
See Table 16 on page -36 at the end of the Product Certifications section for Entity Parameters.

N5 FM Class I, Division 2, and Dust Ignition-proof
Certificate: 3034378
Standards: FM Class 3600:1998, FM Class 3610:2010, FM Class 3810:2005, NEMA-250:1997, IEC 60529:2004
Markings: NI CL I, DIV 2, GP A, B, C, D; T4(–50 °C ≤ T_a ≤ +70 °C); DIP CL II/III DIV 1, GP E, F, G; –50 °C ≤ T_a ≤+85 °C; when installed per Rosemount drawing 00849-1000; Type 4X; IP66

Canada

I6 CSA Intrinsically Safe
Certificate: 1261865
Standards: CSA Std. C22.2 No. 25-1966, CSA Std. C22.2 No. 30-M1986, CAN/CSA C22.2 No. 94-M91, CSA C22.2 No. 142-M1987, CAN/CSA C22.2 No. 157-92, CSA Std. C22.2 No. 213-M1987, CSA Std. C22.2 No 60529:05
Markings: Intrinsically Safe for CL I, DIV 1 GP A, B, C, D; Suitable for CL I DIV 2 GP A, B, C, D; when installed per Rosemount drawing 00849-1016; T3C; Type 4X, IP66
See Table 16 on page -36 at the end of the Product Certifications section for Entity Parameters.

N6 CSA Class I, Division 2
Certificate: 1261865
Standards: CSA Std. C22.2 No. 25-1966, CSA Std. C22.2 No. 30-M1986, CAN/CSA C22.2 No. 94-M91, CSA C22.2 No. 142-M1987, CSA Std. C22.2 No. 213-M1987, CSA Std. C22.2 No 60529:05;
Markings: Suitable for CL I DIV 2 GP A, B, C, D; T3C; when installed per Rosemount drawing 00849-1016; Type 4X, IP66

Europe

I1 ATEX Intrinsic Safety
Certificate: Baseefa09ATEX0022X
Standards: EN 60079-0:2012, EN 60079-11:2012;
Markings: Ex II 1 G Ex ia IIC T4/T5 Ga, T4(–60 °C ≤ T_a ≤+70 °C),T5(–60 °C ≤ T_a ≤ +40 °C);
See Table 16 on page -36 at the end of the product certifications section for entity parameters.

Special Conditions for Safe Use (X):

1. The surface resistivity of the antenna is greater than 1 GΩ. To avoid electrostatic charge build-up, it must not be rubbed or cleaned with solvents or a dry cloth.
2. The Model 701PBKKF Power Module or Intelligent Power Module 71008 may be replaced in a hazardous area. The Power Modules have surface resistivity greater than 1 GΩ and must be properly installed in the wireless device enclosure. Care must be taken during transportation to and from the point of installation to prevent electrostatic charge build-up.
3. The enclosure may be made from aluminum alloy and given a protective polyurethane paint finish; however, care should be taken to protect it from impact or abrasion when located in a zone 0 area.

International

I7 IECEx Intrinsic Safety
Certificate: IECEx BAS 09.0004X
Standards: IEC 60079-0:2011, IEC 60079-11:2011;
Markings: Ex ia IIC T4/T5 Ga, T4(–60 °C ≤ T_a ≤ +70 °C), T5(–60 °C ≤ T_a ≤ +40 °C);
See Table 16 on page -36 at the end of the Product Certifications section for Entity Parameters.

Special Conditions for Safe Use (X):

1. The surface resistivity of the antenna is greater than 1 GΩ. To avoid electrostatic charge build-up, it must not be rubbed or cleaned with solvents or a dry cloth.
2. The Model 701PBKKF Power Module or Intelligent Power Module 71008 may be replaced in a hazardous area. The Power Modules have surface resistivity greater than 1 GΩ and must be properly installed in the wireless device enclosure. Care must be taken during transportation to and from the point of installation to prevent electrostatic charge build-up.
3. The enclosure may be made from aluminum allow with a protective polyurethane paint finish; however, care should be taken to protect it from impact or abrasion when located in Zone 0.

Brazil

I2 INMETRO Intrinsic Safety
Certificate: UL-BR 15.0034X
Standards: ABNT NBR IEC 60079-0:2008 + Corrigendum 1:2011, ABNT NBR IEC 60079-11:2009
Markings: Ex ia IIC T4/T5, T4(–60 °C ≤ T_a ≤ +70 °C), T5 (–60 °C ≤ T_a ≤ +40 °C)
See Table 16 on page -36 at the end of the product certifications section for entity parameters.

Special Conditions for Safe Use (X):

1. The surface resistance of the antenna is greater than 1GΩ. To avoid electrostatic charge build-up, it must not be rubbed or cleaned with solvents or a dry cloth.
2. The Model 701PBKKF Power Module may be replaced in a hazardous area. The power module has surface resistance greater than 1GΩ and must be properly installed in the wireless device enclosure. Care must be taken during transportation to and from the point of installation to prevent electrostatic charge build-up.
3. The 848T enclosure may be made of aluminum alloy and given a protective polyurethane paint finish; however, care should be taken to protect it from impact or abrasion if located in areas that requires EPL Ga (Zone 0).

China

I3 NEPSI Intrinsic Safety
Certificate: GYJ16.1205X
Markings: Ex ia IIC T4/T5 Ga, T4(–60 °C ≤ T_a ≤ +70 °C), T5(–60 °C ≤ T_a ≤ +40 °C)
See Table 16 on page -36 at the end of the Product Certifications section for Entity Parameters.

Special Conditions for Safe Use (X):

1. The surface resistance of the antenna is greater than 1 GΩ. To avoid electrostatic charge build-up, it must not be rubbed or cleaned with solvents or a dry cloth.
2. The power module may be replaced in a hazardous area. The power module has surface resistance greater than 1 GΩ and must be properly installed in the wireless device enclosure. Care must be taken during transportation to and from the point of installation to prevent electrostatic charge build-up.
3. Manufacture-provided battery pack made up of two Tadiran TL-5920 Lithium Thionyl-Chloride primary cells should be used.
4. The product should be used with Ex-certified associated apparatus to establish explosion protection system that can be used in explosive gas atmospheres. Wiring and terminals should comply with the instruction manual of the product and associated apparatus.
5. The cables between this product and associated apparatus should be shielded cables (the cables must have insulated shield). The shield has to be grounded reliably in non-hazardous area.
6. End user is not permitted to change any components inside, but to settle the problem in conjunction with manufacturer to avoid damage to the product.

7. When installation, use and maintenance of this product, observe following standards:
   GB3836.13-2013 “Electrical apparatus for explosive gas atmospheres Part 13: Repair and overhaul for apparatus used in explosive gas atmospheres”
   GB3836.15-2000 “Electrical apparatus for explosive gas atmospheres Part 15: Electrical installations in hazardous area (other than mines)”
   GB3836.16-2006 “Electrical apparatus for explosive gas atmospheres Part 16: Inspection and maintenance of electrical installation (other than mines)”
   GB3836.18-2010 " Explosive Atmospheres Part 18: Intrinsically Safe System
   GB50257-2014 “Code for construction and acceptance of electric device for explosion atmospheres and fire hazard electrical equipment installation engineering”

EAC – Belarus, Kazakhstan, Russia

IM Technical Regulations Customs Union (EAC) Intrinsic Safety
Markings: 0Ex ia IIC T4, T5 Ga X, T4(–60 °C ≤ T_a ≤ +70 °C), T5(–60 °C ≤ T_a ≤ +40 °C); IP66/IP67
See Table 16 on page -36 at the end of the Product Certifications section for Entity Parameters.

Japan

I4 TIIS Intrinsic Safety
Certificate: TC19154
Markings: Ex ia IIC T4, T4(–20 °C ≤ T_a ≤ +60 °C)
See Table 16 on page -36 at the end of the Product Certifications section for Entity Parameters.

Additional Certifications

SBV Bureau Veritas (BV) Type Approval
Certificate: 26325/A3 BV
Requirements: Bureau Veritas Rules for the Classification of Steel Ships

Table 16. Entity Parameters

	FM	CSA	ATEX/IECEx/ NEPSI/EAC/ TIIS/INMETRO
Voltage U_o (V)	6.51	6.6	6.6
Current I_o (mA)	3.12	3.2	3.2
Power P_o (mW)	5.1	20.4	5.3
Capacitance C_o (μF)	22	22	22
Inductance L_o (H)	1	1	1

Dimensional drawings

Figure 11. Rosemount 848T Wireless

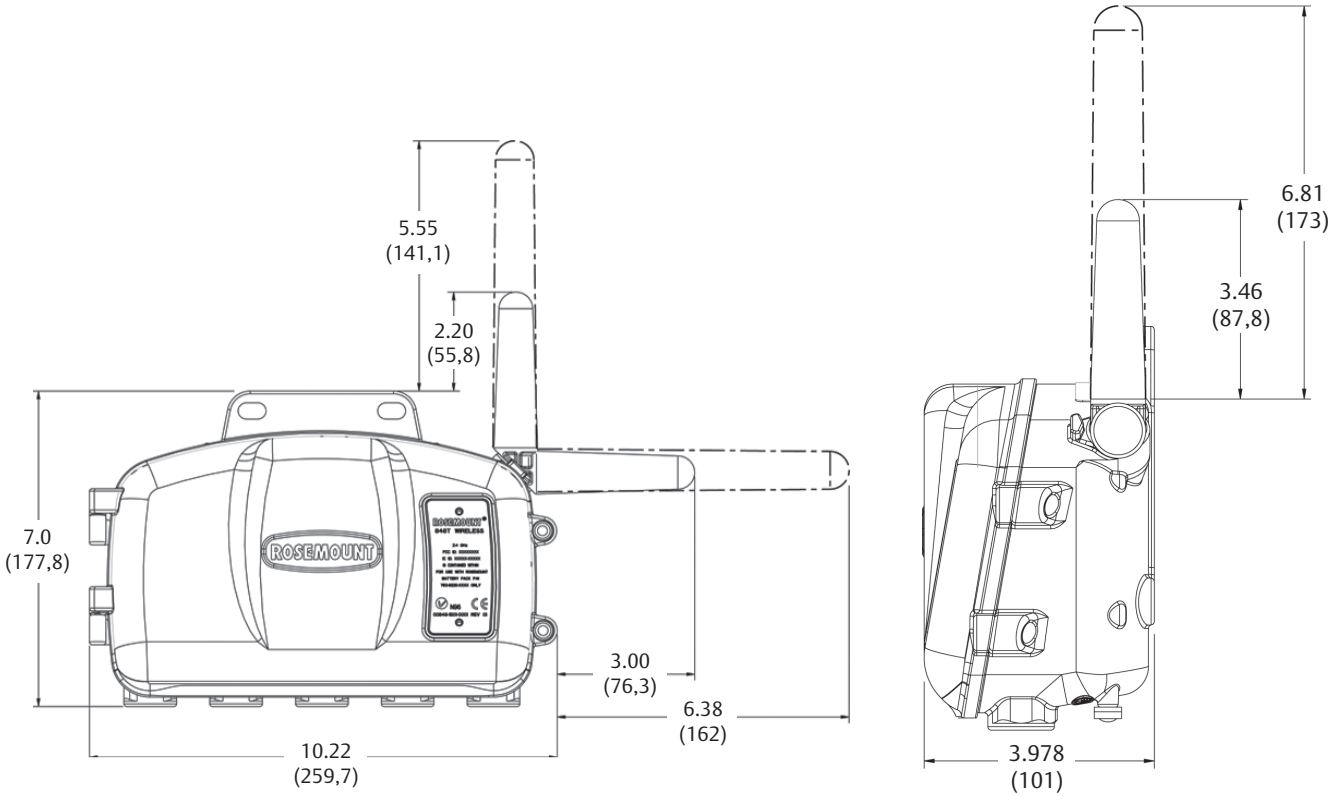

Dimensions are in inches (millimeters).

Global Headquarters
Emerson Automation Solutions
6021 Innovation Blvd.
Shakopee, MN 55379, USA
+1 800 999 9307 or +1 952 906 8888
+1 952 949 7001
RFQ.RMD-RCC@Emerson.com

North America Regional Office
Emerson Automation Solutions
8200 Market Blvd.
Chanhassen, MN 55317, USA
+1 800 999 9307 or +1 952 906 8888
+1 952 949 7001
RMT-NA.RCCRFQ@Emerson.com

Latin America Regional Office
Emerson Automation Solutions
1300 Concord Terrace, Suite 400
Sunrise, FL 33323, USA
+1 954 846 5030
+1 954 846 5121
RFQ.RMD-RCC@Emerson.com

Europe Regional Office
Emerson Automation Solutions Europe GmbH
Neuhofstrasse 19a P.O. Box 1046
CH 6340 Baar
Switzerland
+41 (0) 41 768 6111
+41 (0) 41 768 6300
RFQ.RMD-RCC@Emerson.com

Asia Pacific Regional Office
Emerson Automation Solutions Asia Pacific Pte Ltd
1 Pandan Crescent
Singapore 128461
+65 6777 8211
+65 6777 0947
Enquiries@AP.Emerson.com

Middle East and Africa Regional Office
Emerson Automation Solutions
Emerson FZE P.O. Box 17033
Jebel Ali Free Zone - South 2
Dubai, United Arab Emirates
+971 4 8118100
+971 4 8865465
RFQ.RMTMEA@Emerson.com

Linkedin.com/company/Emerson-Automation-Solutions

Twitter.com/Rosemount_News

Facebook.com/Rosemount

Youtube.com/user/RosemountMeasurement

Google.com/+RosemountMeasurement

Standard Terms and Conditions of Sale can be found on the Terms and Conditions of Sale page.
The Emerson logo is a trademark and service mark of Emerson Electric Co.
Rosemount and Rosemount logotype are trademarks of Emerson.
Plantweb, SmartPower, and Complete Point Solutions are trademarks of Emerson..
*Wireless*HART is a registered trademark of the FieldComm Group.
FOUNDATION Fieldbus is a trademark of the FieldComm Group.
eurofast and minifast are registered trademarks of TURCK.
NEMA is a registered trademark and service mark of the National Electrical Manufacturers Association.
National Electrical Code is a registered trademark of National Fire Protection Association, Inc.
All other marks are the property of their respective owners.
© 2017 Emerson. All rights **reserved.**