Reference Manual
00809-0100-4792, Rev CB
February 2014

Rosemount 1495 Orifice Plate, 1496 Orifice Flange Union

Rosemount 1495
Orifice Plate

Rosemount 1496
Orifice Flange Union

CE

HART COMMUNICATION PROTOCOL

ROSEMOUNT

www.rosemount.com

EMERSON. Process Management

Rosemount 1495 Orifice Plate
Rosemount 1496 Orifice Flange Union

NOTICE

Read this manual before working with the product. For personal and system safety, and for optimum product performance, make sure you thoroughly understand the contents before installing, using, or maintaining this product.

Within the United States, Rosemount Inc. has two toll-free assistance numbers.

Customer Central: 1-800-999-9307 (7:00 a.m. to 7:00 p.m. CST)
Technical support, quoting, and order-related questions.

North American Response Center: 1-800-654-7768
24 hours a day – Includes Canada Equipment service needs.

For equipment service or support needs outside the United States, contact your local Emerson Process Management representative.

⚠ CAUTION

The products described in this document are NOT designed for nuclear qualified applications.

Using non-nuclear qualified products in applications that require nuclear qualified hardware or products may cause inaccurate readings.

For information on Rosemount nuclear-qualified products, contact your local Emerson Process Management Sales Representative.

Contents

Section 1: Introduction

Using this manual 1
Service support 2
Product recycling/disposal 2

Section 2: Installation, location, and orientation

Safety messages 3
Installation checklist 3
Receiving and inspection 4
Installation configuration 4
Straight run requirements 6

Section 3: Hardware installation for Rosemount 1495 Orifice Plate

1495 Types 7
Bore types 7
Safety messages 10
Installation instructions 11
1495 Dimensional drawings 14
1495 Weights (estimated) 18

Section 4: Hardware installation for Rosemount 1496 flange union

1496 Types 21
Safety messages 21
1496 Flange union components 22
Installation instructions 22
1496 Dimensional drawings 24
ASME B16.36-1996 25
1496 Weights (estimated) 33

Appendix A: Specifications and reference data

Specifications 35
Functional specifications 35
Physical specifications 36
Return of materials 39
Sizing and how to order 40
Rosemount 1495 configuration 42
Ordering information 42
Rosemount 1496 configuration 46
Ordering information 47
Options (include with selected model number) 48

Appendix B: Recommended installation requirements

Recommended Straight Run Requirements 51
ISO 5167-2 51
AGA Report No. 3 55
ASME MFC-3M-2004 59
Bolt torque recommendations 62

Appendix C: Calculation data sheet

Section 1 Introduction

Using this manual . . . . . page 1
Service support . . . . . page 2
Product recycling/disposal . . . . . page 2

1.1 Using this manual

This product manual provides installation and configuration instructions for the Rosemount 1495 Orifice Plate, Rosemount 1496 Flange Union.This section contains an explanation of each section of the manual and an installation checklist.

- Section 2: Installation, location, and orientation explains initial inspection, operating limitations, and in what location and orientation to install the orifice plate and associated hardware.
- Section 3: Hardware installation for Rosemount 1495 Orifice Plate explains how to install the Orifice Plate in either existing orifice flanges or with the Rosemount 1495 Orifice Plate.
- Section 4: Hardware installation for Rosemount 1496 Flange Union explains how to install the 1496 Flange Union.
- Appendix A: Specifications and reference data supplies reference and specification data, as well as ordering information.
- Appendix B: Recommended installation requirements shows the recommended straight run requirements and bolt torques used for orifice plate installations.
- Appendix C: Calculation data sheet

1.2 Service support

To expedite the return process outside of the United States, contact the nearest Emerson Process Management representative.

Within the United States, call the Rosemount National Response Center using the 1-800-654-RSMT (7768) toll-free number. This center, available 24 hours a day, will assist you with any needed information or materials.

The center will ask for product model and serial numbers, and will provide a Return Material Authorization (RMA) number. The center will also ask for the process material to which the product was last exposed.

⚠ CAUTION

Individuals who handle products exposed to a hazardous substance can avoid injury if they are informed of and understand the hazard. If the product being returned was exposed to a hazardous substance as defined by OSHA, a copy of the required Material Safety Data Sheet (MSDS) for each hazardous substance identified must be included with the returned goods.

Rosemount National Response Center representatives will explain the additional information and procedures necessary to return goods exposed to hazardous substances.

1.3 Product recycling/disposal

Recycling of equipment and packaging should be taken into consideration and disposed of in accordance with local and national legislation/regulations.

Section 2 Installation, location, and orientation

Safety messages . . . . . page 3
Installation checklist . . . . . page 3
Receiving and inspection . . . . . page 4
Installation configuration . . . . . page 4
Straight run requirements . . . . . page 6

This section describes the orientation, location and alignment limits for installing the Rosemount 1495 Orifice Plate, 1496 Flange Union. Read it thoroughly before starting the installation.

2.1 Safety messages

Instructions and procedures in this section may require special precautions to ensure the safety of the personnel performing the operations. Please refer to the following safety messages before performing any operation in this section.

⚠ WARNING

Failure to follow these installation guidelines could result in death or serious injury:

* Make sure only qualified personnel perform the installation.

2.2 Installation checklist

The following list is a summary of the steps required to complete a Rosemount 1495 Orifice Plate installation. If this is an entirely new installation, begin with step 1. If the Flange Union is already in place, verify that the orifice flange size and rating match the recommended specifications, and begin with step 5.

1. Determine where the Rosemount 1495 Orifice Plate, 1496 Flange Union is to be placed within the piping system.
2. Establish the proper orientation as determined by the intended service for the orifice plate.
3. Review Appendix B: Recommended Installation Requirements .
4. Confirm the Rosemount 1495 and/or 1496 configurations.
5. Measure the pipe's internal diameter (ID), preferably at 1 x ID from the orifice flange (upstream or downstream), or at the tap location for flange taps.

NOTE
Providing the pipe internal diameter at the time of purchase is necessary to maintain published orifice plate accuracy.

6. Install the hardware. Refer to Section 3: Installation instructions for 1495 Orifice Plate installation and Section 4: Hardware installation for Rosemount 1496 Flange Union for 1496 Orifice flange union installation.
7. Check for leaks.
8. Commission the orifice plate flowmeter.

2.3 Receiving and inspection

Rosemount 1495 Orifice Plates, 1496 Flange Unions are available in different models and with different options, so it is important to inspect and know which model you have before beginning installation.

Upon receipt of the shipment, check the packing list against the material received and the purchase order. Report any damage to the carrier.

2.4 Installation configuration

The Orifice Flowmeter Assembly must be installed in the proper orientation relative to the pipe and the fluid measured.

Gas applications

Mount hardware upward to allow moisture to drain out and not fill the impulse piping:

- Slope impulse piping at least one inch per foot (8 centimeters per meter) downward from the transmitter toward the process connection.

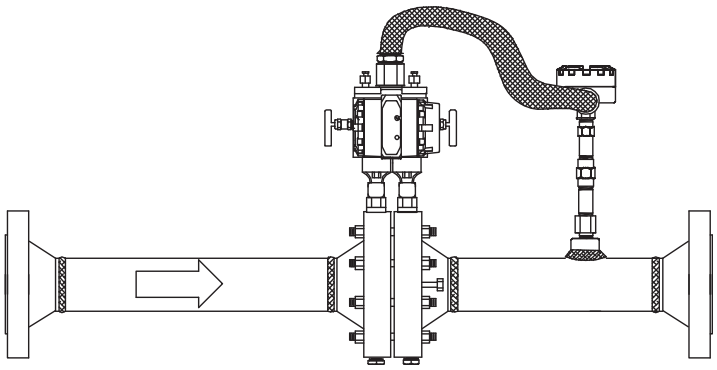

Liquid applications

Mount hardware downward to allow the escape of trapped vapor in the impulse piping:

- Slope impulse piping at least one inch per foot (8 centimeters per meter) upward from the transmitter toward the process connection.
- Vent all gas from the liquid piping legs.
- Prevent sediment deposits in the impulse piping.
- Keep the liquid head balanced on both legs of the impulse piping.

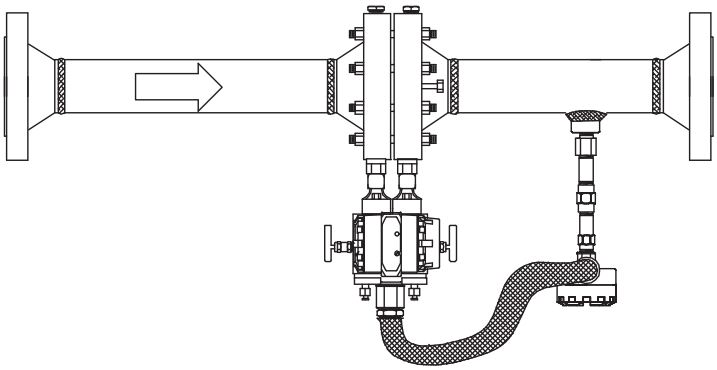

Steam applications

Mount hardware to allow for a water leg in the impulse piping:

- In steam or other elevated temperature services, do not allow the temperatures at the transmitter process flanges to exceed 300 °F (149 °C).
- Do not blow down impulse piping through the transmitter. Flush the lines with the blocking valves closed and refill the lines with water before resuming measurement
- Keep the liquid head balanced on both legs of the impulse piping.

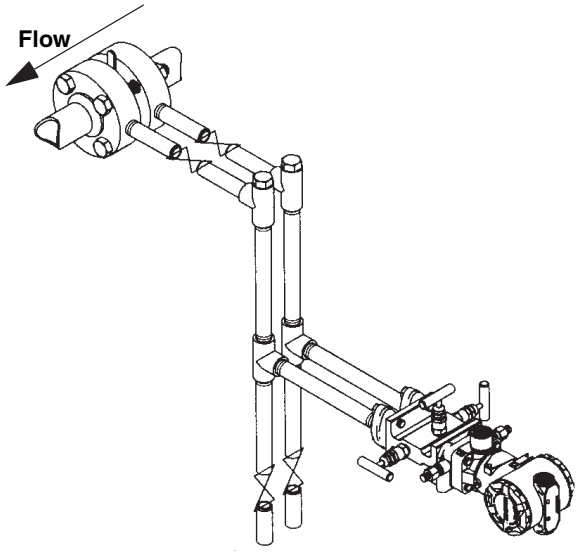

Other installation considerations:

- Orient the high side of transmitter to measure upstream of the DP element.
- Orient the low side of transmitter to measure downstream of the DP element.
- Temperature taps and thermowells should be located downstream of the DP element.
- Flow Conditioners and Straighteners are always located upstream of the DP element. Refer to Appendix B: Recommended Installation Requirements .
- The handle of the orifice plate has the word “Inlet” stamped on the side that faces upstream.
- To correct for installation effects, the transmitter should be zeroed after mounting.

2.5 Straight run requirements

To obtain published accuracy, sufficient straight run is required to produce a fully developed flow profile. Shorter straight run lengths are possible, but accuracy will be affected. Consult the Factory for further information. Refer to Appendix B: Recommended Installation Requirements for recommended straight pipe lengths.

Section 3 Hardware installation for Rosemount 1495 Orifice Plate

1495 types . . . . . page 7
Safety messages . . . . . page 10
Installation instructions . . . . . page 11
1495 dimensional drawings . . . . . page 14
1495 weights (estimated) . . . . . page 17

3.1 1495 types

This section provides hardware installation instructions for the Rosemount 1495 Orifice Plate. Installation procedures are similar for all services. Service-specific instructions are provided where necessary. Otherwise, all instructions in this section apply to all services. For more information on 1495 Orifice Plate types, see page 6.

- Refer to transmitter installation instructions where applicable.

3.1.1 Bore types

Figure 3-1. Concentric Square-Edged (standard)

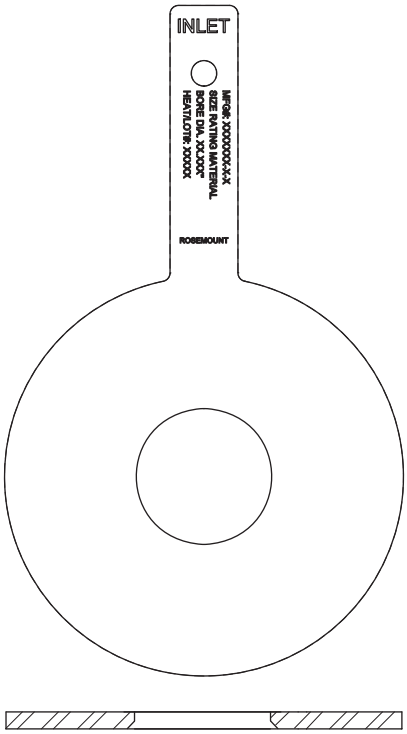

Figure 3-2. Conical Entrance Bore (Option Code TC)

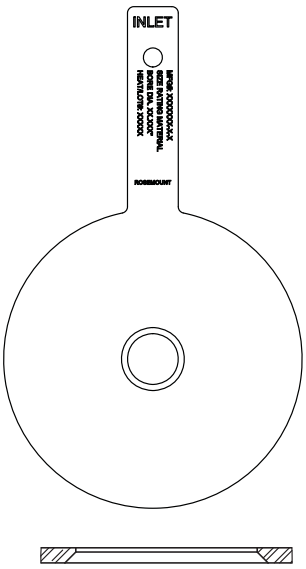

Figure 3-3. Eccentric Bore (Option Code TE)

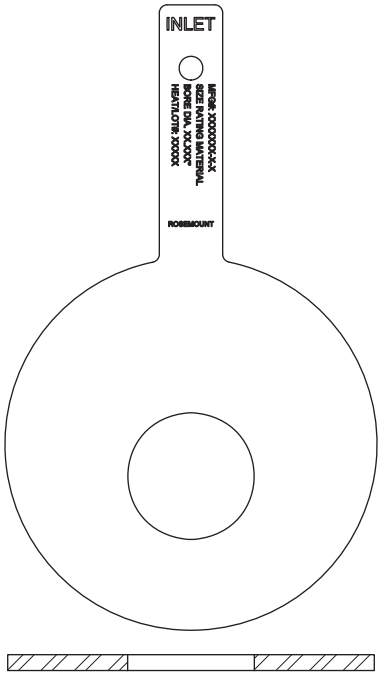

Figure 3-4. Segmental Bore (Option Code TS)

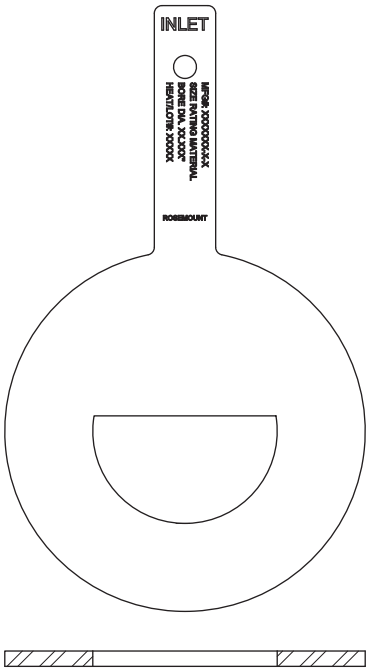

Figure 3-5. Quadrant Edged Bore (Option Code TQ)

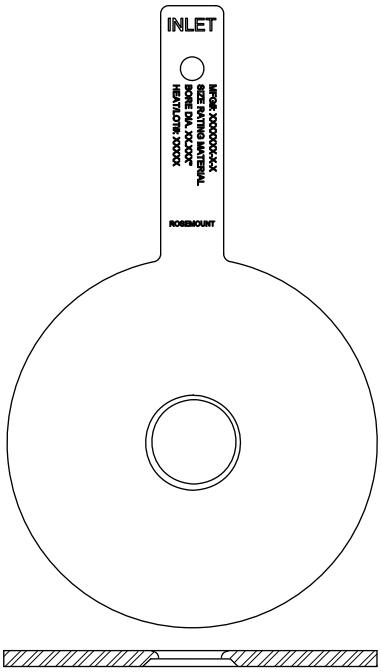

Figure 3-6. Restriction Orifice - Beveled Bore (Option Code RO)

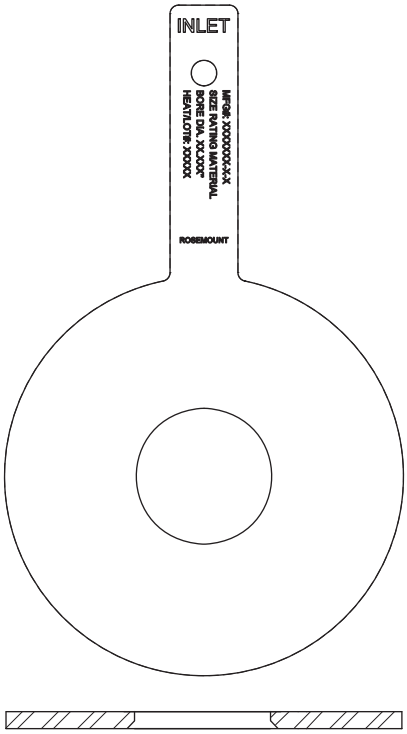

3.2 Safety messages

Instructions and procedures in this section may require special precautions to ensure the safety of the personnel performing the operations. Please refer to the following safety messages before performing any operation in this section.

⚠ WARNING

Failure to follow these installation guidelines could result in death or serious injury:

* Make sure only qualified personnel perform the installation.

3.3 Installation instructions

Step 1: Determine the proper placement

Determine the proper placement by ensuring adequate straight run. See Appendix B: Recommended Installation Requirements.

Step 2: Determine the proper orientation

To determine the proper orientation, see "Installation Configuration" on page 2.

Step 3: Weld the flange union

To weld the flange union, see "Step 3: Weld the Flange Union" on page 2.

⚠ WARNING

Personal hazard! To prevent injury, remove pressure and drain pipe assembly before installing or removing orifice plate.

⚠ DANGER

If the process fluid is caustic or otherwise hazardous, the procedure outlined here must be modified as required to prevent death or serious injury to personnel.

Step 4: Install the orifice plate

General installation instructions to install (or remove) the orifice plate are as follows:

1. Make certain the pipeline is not under pressure and has been drained or purged.
2. Loosen all studs and nuts.
3. Remove the studs in one half of the flange union.
4. Spread flange union by turning jackscrews clockwise.
5. Install new plate or remove existing plate for replacement or inspection.
6. Install new gaskets when installing plate. It is recommended to install new gaskets each time orifice flange union is separated.
7. Release the flange union by turning Jackscrews counter clockwise.
8. Replace studs.
9. Tighten studs in a star pattern. See "Bolt Torque Recommendations" on page 196.

NOTE
Refer to published standards (AGA3, ASME MFC-3M, ISO 5167 for installation guidelines.

Once the orifice plate is installed, proceed by installing connection systems, manifolds, and/or transmitters per manufacturer's recommended specifications and plant standards.

NOTE
Universal style orifice plates are designed for installation into junior or senior orifice fittings as well as into RTJ Plate Holders.

Figure 3-7. Paddle Types

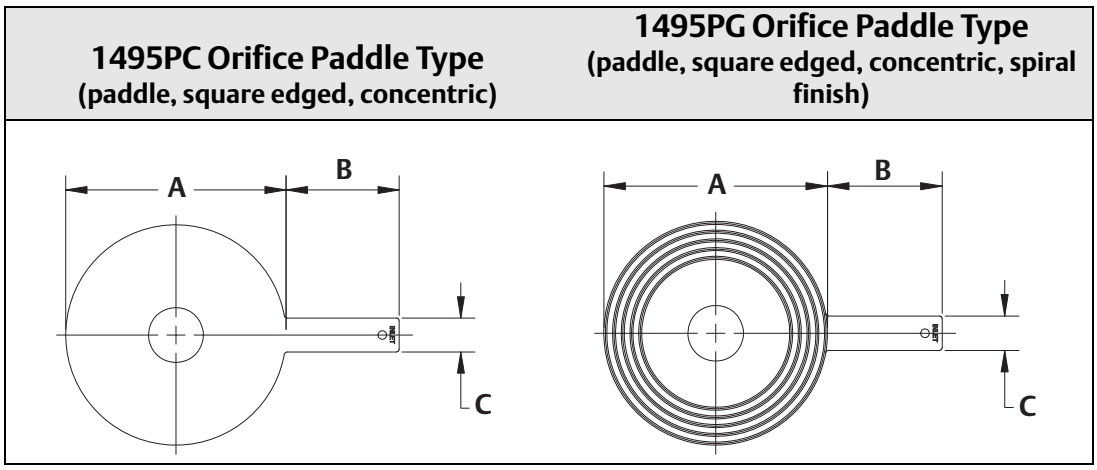

A. Diameter
B. Handle Length
C. Handle Width

Line size	Diameter for paddle type [1]						Handle length	Handle width
	150#	300#	600#	900#	1500#	2500#		
2-in.	4.125 (104.78)	4.375 (111.13)	4.375 (111.13)	5.625 (142.875)	5.625 (142.875)	5.750 (146.05)	4.0 (101.6)	1.00 (25.4)
2 1/2-in.	4.875 (123.82)	5.125 (130.18)	5.125 (130.18)	6.500 (165.1)	6.500 (165.1)	6.625 (168.275)	4.0 (101.6)	1.00 (25.4)
3-in.	5.375 (136.53)	5.875 (149.23)	5.875 (149.23)	6.625 (168.275)	6.875 (174.625)	7.750 (196.85)	4.0 (101.6)	1.00 (25.4)
4-in.	6.875 (174.63)	7.125 (180.98)	7.625 (193.7)	8.125 (206.375)	8.250 (209.55)	9.250 (234.95)	4.0 (101.6)	1.00 (25.4)
6-in.	8.750 (222.25)	9.875 (250.83)	10.500 (266.7)	11.375 (288.925)	11.125 (282.575)	12.500 (317.5)	4.0 (101.6)	1.00 (25.4)
8-in.	11.000 (279.4)	12.125 (307.98)	12.625 (320.675)	14.125 (358.775)	13.875 (352.425)	15.250 (387.35)	6.0 (127)	1.5 (38.1)
10-in.	13.375 (339.73)	14.250 (361.95)	15.750 (400.05)	17.125 (434.975)	17.125 (434.975)	18.750 (476.25)	6.0 (152.4)	1.5 (38.1)
12-in.	16.125 (409.58)	16.625 (422.26)	18.000 (457.2)	19.625 (498.475)	20.500 (520.7)	21.625 (549.275)	6.0 (152.4)	1.5 (38.1)
14-in.	17.750 (450.85)	19.125 (485.78)	19.375 (339.725)	20.500 (520.7)	22.750 (577.85)	—	6.0 (152.4)	1.5 (38.1)

Line size	Diameter for paddle type [1]						Handle length	Handle width
	150#	300#	600#	900#	1500#	2500#		
16-in.	20.250 (514.35)	21.250 (539.75)	22.250 (565.15)	22.625 (574.675)	25.250 (641.35)	—	6.0 (152.4)	1.5 (38.1)
18-in.	21.500 (546.1)	23.375 (593.725)	24.000 (609.6)	25.000 (635.00)	27.625 (701.675)	—	6.0 (152.4)	1.5 (38.1)
20-in.	23.750 (603.25)	25.625 (650.875)	26.750 (679.45)	27.375 (695.325)	29.625 (752.475)	—	6.0 (152.4)	1.5 (38.1)
24-in.	28.125 (714.375)	30.375 (771.525)	31.000 (787.4)	32.875 (835.025)	35.500 (901.7)	—	6.0 (152.4)	1.5 (38.1)

(1) Measurement is in inches (millimeters).

1495UC Orifice Universal Type
(universal, square edged, concentric)

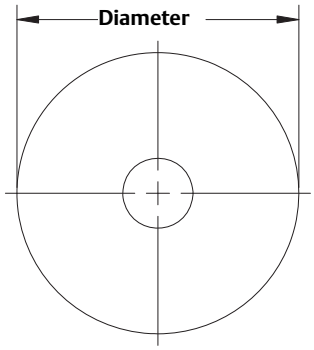

Line size	Diameter for universal type[1]
2-in.	2.437 (61.8998)
2 1/2-in.	2.812 (71.4248)
3-in.	3.437 (87.2998)
4-in.	4.406 (111.912)
6-in.	6.437 (163.5)
8-in.	8.437 (214.3)
10-in.	10.687 (271.45)
12-in.	12.593 (319.862)
14-in.	14.000 (355.6)
16-in.	16.000 (406.4)
18-in.	18.000 (457.2)
20-in.	20.000 (508)
24-in.	24.000 (609.6)

(1) Measurement is in inches (millimeters).

3.4 1495 dimensional drawings

Figure 3-8. 1495 Paddle Type Orifice Plate (DIN, Paddle, Square edged, Concentric)

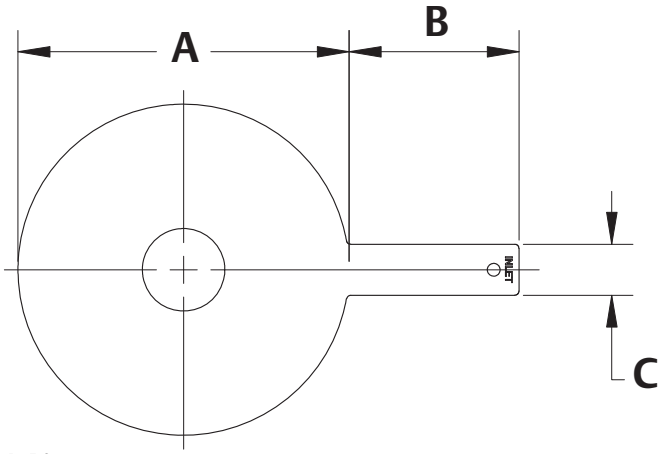

A. Diameter
B. Handle Length
C. Handle Width

TABLE 1. 1495 Orifice Plate Dimensions[1]

DN	Diameter (max) – by flange rating						Handle width	Handle length
	PN 10	PN 16	PN 25	PN 40	PN 63/64	PN 100		
DN 50	4.21 (107)	4.21 (107)	4.21 (107)	4.21 (107)	4.45 (113)	4.69 (119)	1.5 (40)	6.3 (160)
DN 65	5 (127)	5 (127)	5 (127)	5 (127)	5.43 (138)	5.67 (144)	1.5 (40)	6.3 (160)
DN 80	5.6 (142)	5.6 (142)	5.6 (142)	5.6 (142)	5.82 (148)	6.06 (154)	1.5 (40)	6.3 (160)
DN 100	6.38 (162)	6.38 (162)	6.61 (168)	6.61 (168)	6.85 (174)	7.09 (180)	1.5 (40)	6.3 (160)
DN 125	7.56 (192)	7.56 (192)	7.64 (194)	7.63 (194)	8.27 (210)	8.54 (217)	1.5 (40)	6.3 (160)
DN 150	8.58 (218)	8.58 (218)	8.82 (224)	8.82 (224)	9.72 (247)	10.12 (257)	1.5 (40)	6.3 (160)
DN 200	10.74 (273)	10.74 (273)	11.18 (284)	11.42 (290)	12.17 (309)	12.76 (324)	1.5 (40)	6.3 (160)
DN 250	12.91 (328)	12.95 (329)	13.39 (340)	13.86 (352)	14.33 (364)	15.39 (391)	1.5 (40)	6.3 (160)
DN 300	14.88 (378)	15.11 (384)	15.75 (400)	16.42 (417)	16.69 (424)	18.03 (458)	1.5 (40)	6.3 (160)
DN 350	17.24 (438)	17.48 (444)	17.99 (457)	18.66 (474)	19.13 (486)	20.16 (512)	1.5 (40)	6.3 (160)
DN 400	19.25 (489)	19.49 (495)	20.24 (514)	21.49 (546)	21.38 (543)	22.52 (572)	1.5 (40)	6.3 (160)

TABLE 1. 1495 Orifice Plate Dimensions(1)

DN	Diameter (max) – by flange rating						Handle width	Handle length
	PN 10	PN 16	PN 25	PN 40	PN 63/64	PN 100		
DN 450	21.22 (539)	21.85 (555)	22.24 (565)	22.48 (571)	Not Applicable	Not Applicable	1.5 (40)	6.3 (160)
DN 500	23.39 (594)	24.29 (617)	24.57 (624)	24.72 (628)	25.87 (657)	27.72 (704)	1.5 (40)	8.0 (200)
DN 600	27.36 (695)	28.9 (734)	28.78 (731)	29.41 (747)	30.08 (764)	32.01 (813)	1.5 (40)	8.0 (200)

(1) Measurement is in inches (millimeters).

Figure 3-9. Integral Plate Holder (if ordered)

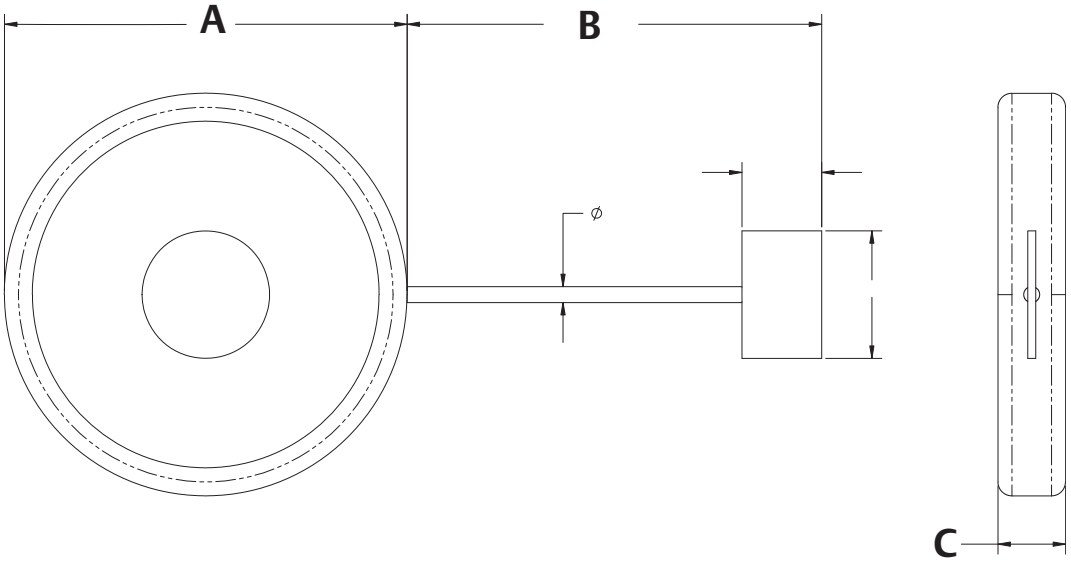

A. See Table 3-1 **and** Table 3-2**.**
B. See Table 3-1 **and** Table 3-2**.**
C. See Table 3-1 **and** Table 3-2**.**

Table 3-1. Integral Plate Holder Dimensions for 150#, 300#, and 600#

	Flange rating											
	150#				300#				600#			
Line size	Ring no.	A	B	C	Ring no.	A	B	C	Ring no.	A	B	C
2-in. (DN 50)	R-22	3.56	5.50	1.06	R-23	3.69	5.50	1.06	R-23	3.69	5.50	1.06
2 1/2-in. (DN 65)	R-25	4.31	6.50	1.06	R-26	4.44	6.50	1.06	R-26	4.44	6.50	1.06
3-in. (DN 80)	R-29	4.81	6.50	1.06	R-31	5.31	6.50	1.06	R-31	5.31	6.50	1.06
4-in. (DN 100)	R-36	6.19	6.50	1.06	R-37	6.31	6.50	1.06	R-37	6.31	6.50	1.06
6-in. (DN 150)	R-43	7.94	7.50	1.06	R-45	8.75	7.50	1.06	R-45	8.75	7.50	1.06
8-in. (DN 200)	R-48	10.06	7.50	1.06	R-49	11.06	7.50	1.06	R-49	11.06	7.50	1.06
10-in. (DN 250)	R-52	12.31	8.50	1.06	R-53	13.19	8.50	1.06	R-53	13.19	8.50	1.06
12-in. (DN 300)	R-56	15.31	8.50	1.06	R-57	15.44	8.50	1.06	R-57	15.44	8.50	1.06
14-in. (DN 350)	R-59	15.94	8.50	1.06	R-61	16.94	8.50	1.06	R-61	16.94	8.50	1.06
16-in. (DN 400)	R-64	18.06	8.50	1.19	R-65	18.94	8.50	1.19	R-65	18.94	8.50	1.19
18-in. (DN 450)	R-68	20.69	8.50	1.19	R-69	21.44	8.50	1.19	R-69	21.44	8.50	1.19
20-in. (DN 500)	R-72	22.31	8.50	1.25	R-73	23.50	8.50	1.25	R-73	23.50	8.50	1.25
24-in. (DN 600)	R-76	26.81	8.50	1.44	R-77	27.88	8.50	1.44	R-77	27.88	8.50	1.44

Table 3-2. Integral Plate Holder Dimensions for 900#, 1500#, and 2500#

	Flange rating											
	900#				1500#				2500#			
Line size	Ring no.	A	B	C	Ring no.	A	B	C	Ring no.	A	B	C
2-in. (DN 50)	R-24	4.19	6.50	1.06	R-24	4.19	6.50	1.06	R-26	4.44	6.50	1.06
2 1/2-in. (DN 65)	R-27	4.69	6.50	1.06	R-27	4.69	6.50	1.06	R-28	4.83	6.50	1.19
3-in. (DN 80)	R-31	5.31	6.50	1.06	R-35	5.81	6.50	1.06	R-32	5.50	7.50	1.19

	Flange rating											
	900#				1500#				2500#			
Line size	Ring no.	A	B	C	Ring no.	A	B	C	Ring no.	A	B	C
4-in. (DN 100)	R-37	6.31	6.50	1.06	R-39	6.81	6.50	1.06	R-38	6.81	7.50	1.31
6-in. (DN 150)	R-45	8.75	7.50	1.06	R-46	8.81	7.50	1.19	R-47	9.75	8.50	1.44
8-in. (DN 200)	R-49	11.06	7.50	1.06	R-50	11.25	7.50	1.44	R-51	11.88	9.50	1.69
10-in. (DN 250)	R-53	13.19	8.50	1.06	R-54	13.38	8.50	1.44	R-55	14.63	9.50	2.00
12-in. (DN 300)	R-57	15.44	8.50	1.06	R-58	15.88	9.50	1.44	R-60	17.25	10.50	2.13
14-in. (DN 350)	R-62	17.13	8.50	1.31	R-63	17.50	9.50	1.88	—	—	—	—
16-in. (DN 400)	R-66	19.13	8.50	1.44	R-67	19.63	10.50	2.13	—	—	—	—
18-in. (DN 450)	R-70	21.75	8.50	1.56	R-71	22.13	10.50	2.13	—	—	—	—
20-in. (DN 500)	R-74	23.75	8.50	1.56	R-75	24.25	11.50	2.13	—	—	—	—
24-in. (DN 600)	R-78	28.25	10.50	1.88	R-79	28.63	11.50	2.44	—	—	—	—

3.5 1495 weights (estimated)

Weights are in pounds (kilograms).

Estimated weight based on:

- Paddle Style
- Beta = 0.65 (schedule standard pipe)
- 316/316L SST materials of construction

Any deviation in configuration may affect estimated weights.

	Line size						
Flange rating	2 in. (50 mm)	2.5 in. (64 mm)	3 in. (80 mm)	4 in. (100 mm)	6 in. (150 mm)	8 in. (200 mm)	10 in. (250 mm)
ANSI thickness = 0.125 in. (3.2 mm)							
A3 ANSI Class 300	0.68(0.31)	0.89(0.40)	1.12(0.51)	1.58(0.72)	2.91(1.32)	4.50(2.04)	6.09(2.76)
A6 ANSI Class 600	0.68(0.31)	0.89(0.40)	1.12(0.51)	1.79(0.81)	3.27(1.48)	4.85(2.20)	7.36(3.34)
A6 ANSI Class 900	1.04(0.47)	1.34(0.61)	1.39(0.63)	2.02(0.91)	3.82(1.73)	5.99(2.72)	8.65(3.92)
AF ANSI Class 1500	1.04(0.47)	1.34(0.61)	1.48(0.67)	2.07(0.94)	3.66(1.66)	5.79(2.63)	8.65(3.92)
AT ANSI Class 2500	1.08(0.49)	1.39(0.63)	1.85(0.84)	2.57(1.17)	4.58(2.08)	6.92(3.14)	10.30(4.67)

	Line size						
Flange rating	2 in. (50 mm)	2.5 in. (64 mm)	3 in. (80 mm)	4 in. (100 mm)	6 in. (150 mm)	8 in. (200 mm)	10 in. (250 mm)
DIN thickness = 0.098 in. (2.5 mm)							
D1 DIN PN10	0.66(0.30)	0.83(0.37)	0.97(0.44)	1.18(0.53)	1.91(0.87)	2.85(1.29)	3.99(1.81)
D2 DIN PN16	0.66(0.30)	0.83(0.37)	0.97(0344)	1.18(0.53)	1.91(0.87)	2.85(1.29)	4.02(1.82)
D3 DIN PN25	0.66(0.30)	0.83(0.37)	0.97(0.44)	1.24(0.56)	2.01(0.91)	3.06(1.39)	4.27(1.94)
D4 DIN PN40	0.66(0.30)	0.83(0.37)	0.97(0.44)	1.24(0.56)	2.01(0.91)	3.18(1.44)	4.56(2.07)
D5 DIN PN63	0.71(0.32)	0.93(0.42)	1.02(0.46)	1.32(0.60)	2.38(1.08)	3.58(1.62)	4.86(2.20)
D6 DIN PN100	0.76(0.34)	0.99(0.45)	1.09(0.49)	1.39(0.63)	2.56(1.16)	3.91(1.77)	5.56(2.52)

	Line size					
Flange rating	12 in. (300 mm)	14 in. (350 mm)	16 in. (400 mm)	18 in. (450 mm)	20 in. (500 mm)	24 in. (600 mm)
ANSI thickness = 0.125 in. (3.2 mm)						
A3 ANSI Class 300	8.17(3.70)	10.70(4.85)	13.14(5.96)	15.83(7.18)	18.96(8.60)	26.50(12.02)
A6 ANSI Class 600	9.52(4.32)	5.40(2.45)	14.37(6.52)	16.67(7.56)	20.63(9.36)	27.59(12.52)
A6 ANSI Class 900	11.25(5.10)	12.15(5.56)	14.85(6.74)	18.06(8.19)	21.59(9.79)	30.99(14.06)
AF ANSI Class 1500	12.25(5.56)	15.01(6.81)	18.42(8.35)	21.98(9.97)	25.23(11.44)	36.08(16.37)
AT ANSI Class 2500	13.59(6.17)	N/A	N/A	N/A	N/A	N/A
DIN thickness = 0.098 in. (2.5 mm)						
D1 DIN PN10	5.22(2.37)	6.91(3.13)	8.55(3.88)	10.33(4.69)	12.56(5.70)	17.07(7.74)
D2 DIN PN16	5.37(2.44)	7.10(3.22)	8.76(3.97)	10.94(4.96)	13.52(6.13)	19.00(8.62)
D3 DIN PN25	5.81(2.64)	7.50(3.40)	9.42(4.27)	11.32(5.13)	13.83(6.27)	18.85(8.55)
D4 DIN PN40	6.29(2.85)	8.05(3.65)	10.59(4.80)	11.56(5.24)	13.99(6.35)	19.67(8.92)
D5 DIN PN63	6.49(2.94)	8.44(3.83)	10.48(4.75)	N/A	15.29(6.94)	20.56(9.32)
D6 DIN PN100	7.53(3.42)	9.35(4.24)	11.60(5.26)	N/A	17.51(7.94)	23.23(10.54)

	Line size						
Flange rating	2 in. (50 mm)	2.5 in. (64 mm)	3 in. (80 mm)	4 in. (100 mm)	6 in. (150 mm)	8 in. (200 mm)	10 in. (250 mm)
ANSI thickness = 0.250 in. (6.32 mm)							
A3 ANSI Class 300	1.37(0.62)	1.78(0.81)	2.25(1.02)	3.17(1.44)	5.82(2.64)	8.99(4.08)	12.17(5.52)
A6 ANSI Class 600	1.37(0.62)	1.78(0.81)	2.25(1.02)	3.59(1.63)	6.54(2.97)	9.70(4.40)	14.73(6.68)
A6 ANSI Class 900	2.08(0.94)	2.68(1.22)	2.78(1.26)	4.03(1.83)	7.63(3.46)	11.97(5.43)	17.29(7.84)
AF ANSI Class 1500	2.08(0.94)	2.68(1.22)	2.97(1.35)	4.15(1.88)	7.31(3.32)	11.57(5.25)	17.29(7.84)
AT ANSI Class 2500	2.16(0.98)	2.78(1.26)	3.69(1.68)	5.14(2.33)	9.16(4.15)	13.85(6.28)	20.60(9.34)
DIN thickness = 0.118 in. (3.0 mm)							
D1 DIN PN10	0.80(0.36)	0.99(0.45)	1.16(0.53)	1.41(0.64)	2.30(1.04)	3.41(1.55)	4.49(2.17)
D2 DIN PN16	0.80(0.36)	0.99(0.45)	1.16(0.53)	1.41(0.64)	2.30(1.04)	3.41(1.55)	4.82(2.19)
D3 DIN PN25	0.80(0.36)	0.99(0.45)	1.16(0.53)	1.49(0.68)	2.41(1.09)	3.67(1.67)	5.13(2.33)
D4 DIN PN40	0.80(0.36)	0.99(0.45)	1.16(0.53)	1.49(0.68)	2.41(1.09)	3.82(1.73)	5.47(2.48)
D5 DIN PN63	0.85(0.39)	1.11(0.50)	1.23(0.56)	1.58(0.72)	2.86(1.30)	4.29(1.95)	5.83(2.64)
D6 DIN PN100	0.91(0.41)	1.18(0.54)	1.31(0.59)	1.67(0.76)	3.07(1.39)	4.69(2.13)	6.67(3.03)

	Line size					
Flange rating	**12 in. (300 mm)**	**14 in. (350 mm)**	**16 in. (400 mm)**	**18 in. (450 mm)**	**20 in. (500 mm)**	**24 in. (600 mm)**
ANSI thickness = 0.250 in. (6.32 mm)						
A3 ANSI Class 300	16.33(7.41)	21.41(9.71)	26.28(11.92)	31.66(14.36)	37.91(17.20)	53.01(24.04)
A6 ANSI Class 600	19.04(8.63)	10.80(4.90)	28.74(13.04)	33.34(15.12)	41.26(18.71)	55.19(25.03)
A6 ANSI Class 900	22.51(10.21)	24.50(11.11)	29.70(13.47)	36.12(16.38)	43.18(19.58)	61.98(28.11)
AF ANSI Class 1500	24.50(11.11)	30.02(13.62)	36.83(16.71)	43.96(19.94)	50.46(22.89)	72.17(32.73)
AT ANSI Class 2500	27.19(12.33)	N/A	N/A	N/A	N/A	N/A
DIN thickness = 0.118 in. (3.0 mm)						
D1 DIN PN10	6.26(2.84)	8.29(3.76)	10.26(4.65)	12.39(5.62)	15.08(6.84)	20.48(9.29)
D2 DIN PN16	6.44(2.92)	8.51(3.86)	10.51(4.77)	13.12(5.95)	16.23(7.36)	22.80(10.34)
D3 DIN PN25	6.97(3.16)	9.00(4.08)	11.31(5.13)	13.58(6.16)	16.59(7.53)	22.62(10.26)
D4 DIN PN40	7.55(3.43)	9.66(4.38)	12.70(5.76)	13.87(6.29)	16.79(7.62)	23.60(10.70)
D5 DIN PN63	7.79(3.53)	10.13(4.60)	12.58(5.71)	N/A	18.35(8.32)	24.67(11.19)
D6 DIN PN100	9.04(4.10)	11.22(5.09)	13.92(6.31)	N/A	21.01(9.53)	27.88(12.65)

	Line size						
Flange rating	**2 in. (50 mm)**	**2.5 in. (64 mm)**	**3 in. (80 mm)**	**4 in. (100 mm)**	**6 in. (150 mm)**	**8 in. (200 mm)**	**10 in. (250 mm)**
ANSI thickness = 0.375 in. (9.53 mm)							
A3 ANSI Class 300	2.05(0.93)	2.66(1.21)	3.37(1.53)	4.75(2.16)	8.73(3.96)	13.49(6.12)	18.26(8.28)
A6 ANSI Class 600	2.05(0.93)	2.66(1.21)	3.37(1.53)	5.38(2.44)	9.82(4.45)	14.54(6.60)	22.09(10.02)
A6 ANSI Class 900	3.12(1.41)	4.02(1.83)	4.17(1.89)	6.05(2.74)	11.45(5.19)	17.96(8.15)	25.94(11.77)
AF ANSI Class 1500	3.12(1.41)	4.02(1.83)	4.45(2.02)	6.22(2.82)	10.97(4.97)	17.36(7.88)	25.94(11.77)
AT ANSI Class 2500	3.24(1.47)	4.16(1.89)	5.54(2.51)	7.71(3.50)	13.73(6.23)	20.77(9.42)	30.90(14.02)
DIN thickness = 0.118 in. (4.0 mm)							
D1 DIN PN10	1.06(0.48)	1.32(0.60)	1.55(0.70)	1.88(0.85)	3.06(1.39)	4.55(2.07)	6.39(2.90)
D2 DIN PN16	1.06(0.48)	1.32(0.60)	1.55(0.70)	1.88(0.85)	3.06(1.39)	4.55(2.07)	6.42(2.91)
D3 DIN PN25	1.06(0.48)	1.32(0.60)	1.55(0.70)	1.99(0.90)	3.21(1.46)	4.90(2.22)	6.84(3.10)
D4 DIN PN40	1.06(0.48)	1.32(0.60)	1.55(0.70)	1.99(0.90)	3.21(1.46)	5.09(2.31)	7.30(3.31)
D5 DIN PN63	1.13(0.51)	1.48(0.67)	1.64(0.74)	2.11(0.96)	3.81(1.73)	5.72(2.60)	7.77(3.52)
D6 DIN PN100	1.21(0.55)	1.58(0.72)	1.74(0.79)	2.23(1.01)	4.09(1.86)	6.25(2.84)	8.90(4.04)

	Line size					
Flange rating	**12 in. (300 mm)**	**14 in. (350 mm)**	**16 in. (400 mm)**	**18 in. (450 mm)**	**20 in. (500 mm)**	**24 in. (600 mm)**
ANSI thickness = 0.375 in. (9.53 mm)						
A3 ANSI Class 300	24.50(11.11)	32.11(14.56)	39.41(17.88)	47.49(21.54)	56.87(25.80)	79.51(36.07)
A6 ANSI Class 600	28.56(12.95)	16.20(7.35)	43.12(19.56)	50.01(22.68)	61.89(28.07)	82.78(37.55)
A6 ANSI Class 900	33.76(15.31)	36.75(16.67)	44.55(20.21)	54.18(24.57)	64.77(29.38)	92.97(42.17)
AF ANSI Class 1500	36.75(16.67)	45.03(20.43)	55.25(25.06)	65.94(29.91)	75.68(34.33)	108.25(49.10)
AT ANSI Class 2500	40.78(18.50)	N/A	N/A	N/A	N/A	N/A
DIN thickness = 0.157 in. (4.0 mm)						
D1 DIN PN10	8.34(3.79)	11.05(5.01)	13.68(6.20)	16.53(7.50)	20.10(9.12)	27.31(12.39)
D2 DIN PN16	8.59(3.90)	11.35(5.15)	14.01(6.35)	17.50(7.94)	21.64(9.81)	30.40(13.79)
D3 DIN PN25	9.30(4.22)	12.00(5.44)	15.07(6.84)	18.11(8.22)	22.13(10.04)	30.16(13.68)
D4 DIN PN40	10.07(4.57)	12.88(5.84)	16.94(7.68)	18.49(8.39)	22.39(10.16)	31.47(14.27)
D5 DIN PN63	10.39(4.71)	13.51(6.13)	16.77(7.61)	N/A	24.47(11.10)	32.89(14.92)
D6 DIN PN100	12.05(5.47)	14.96(6.79)	18.56(8.42)	N/A	28.01(12.71)	37.17(16.86)

Section 4 Hardware installation for Rosemount 1496 Flange Union

1496 types . . . . . page 21
Safety messages . . . . . page 21
1496 Flange Union components . . . . . page 22
Installation instructions . . . . . page 22
1496 dimensional drawings . . . . . page 24
ASME B16.36-1996 . . . . . page 25
1496 weights (estimated) . . . . . page 33

4.1 1496 types

This section provides hardware installation instructions for the Rosemount 1496 Flange Union. Installation procedures are similar for all services. Service-specific instructions are provided where necessary. Otherwise, all instructions in this section apply to all services. For more information on 1496 Flange Unions, see page 6.

- Refer to transmitter installation instructions where applicable.

4.2 Safety messages

Instructions and procedures in this section may require special precautions to ensure the safety of the personnel performing the operations. Please refer to the following safety messages before performing any operation in this section.

⚠ WARNING

Failure to follow these installation guidelines could result in death or serious injury:

* Make sure only qualified personnel perform the installation.

4.3 1496 Flange Union components

Figure 4-1 identifies the components of the Rosemount 1496 Flange Union. See the actual installation instructions for proper positioning of the orifice plate.

Figure 4-1. 1496 Flange Union Components

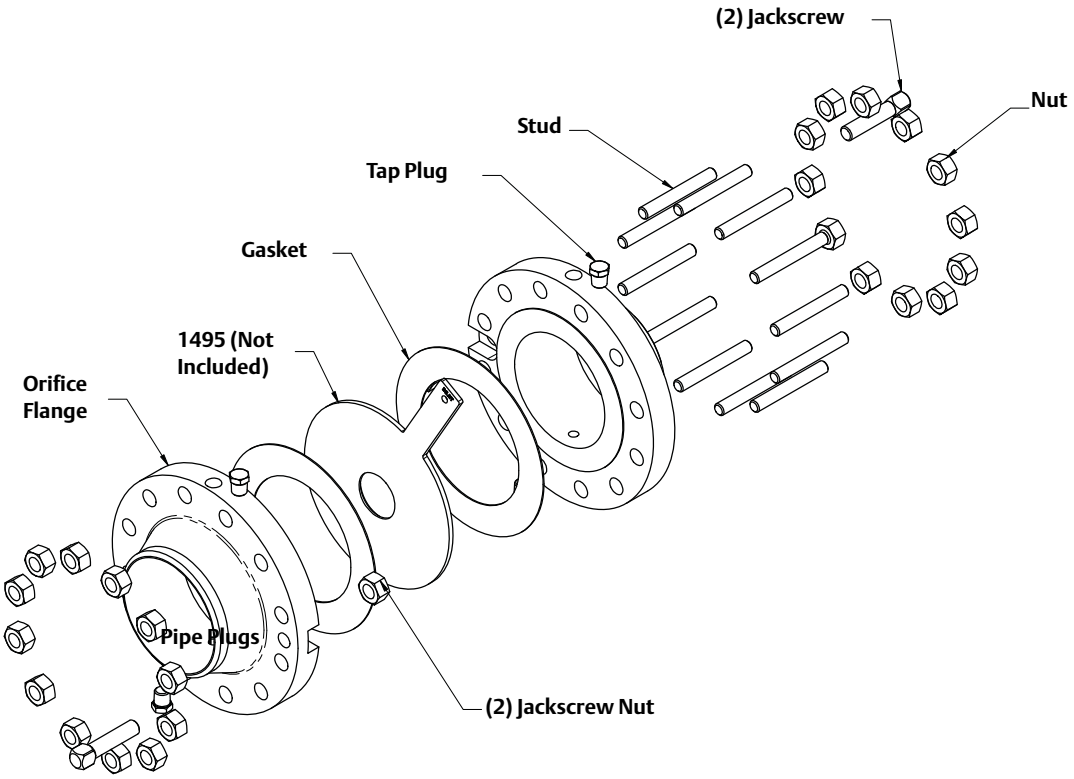

4.4 Installation instructions

Step 1: Determine the proper placement

Determine the proper placement by ensuring adequate straight run. See Appendix B: Recommended installation requirements.

Step 2: Determine the proper orientation

To determine the proper orientation, see "Installation Configuration" on page 2.

Step 3: Weld the flange union

Follow these steps to weld the orifice flanges to the pipe.

1. Make sure the line is depressurized.
2. Prep the pipe ends as required.
3. Ensure that the orifice flange is the correct size and rating.
4. Make certain that the flange taps are aligned and level.
5. Weld the orifice flanges to the pipe.
6. To avoid serious burns allow the orifice flanges to cool before installing the orifice plate per all applicable plant and local codes.

⚠ WARNING

Personal hazard! To prevent injury, remove pressure and drain pipe assembly before installing or removing orifice plate.

⚠ DANGER

If the process fluid is caustic or otherwise hazardous, the procedure outlined here must be modified as required to prevent death or serious injury to personnel.

Step 4: Install the orifice plate

General installation instructions to install (or remove) the orifice plate are as follows:

1. Make certain the pipeline is not under pressure and has been drained or purged.
2. Loosen all studs and nuts.
3. Remove the studs in one half of the flange union.
4. Spread flange union by turning jackscrews clockwise.
5. Install new plate or remove existing plate for replacement or inspection.
6. Install new gaskets when installing plate. It is recommended to install new gaskets each time orifice flange union is separated.
7. Release the flange union by turning Jackscrews counter clockwise.
8. Replace studs.
9. Tighten studs in a star pattern. See "Bolt Torque Recommendations" on page 196.

NOTE
Refer to published standards (AGA3, ASME MFC-3M, ISO 5167 for installation guidelines.

Once the orifice plate is installed, proceed by installing connection systems, manifolds, and/or transmitters per manufacturer's recommended specifications and plant standards.

NOTE
Universal style orifice plates are designed for installation into junior or senior orifice fittings as well as into RTJ Plate Holders.

4.5 1496 dimensional drawings

Figure 4-2. Class 300

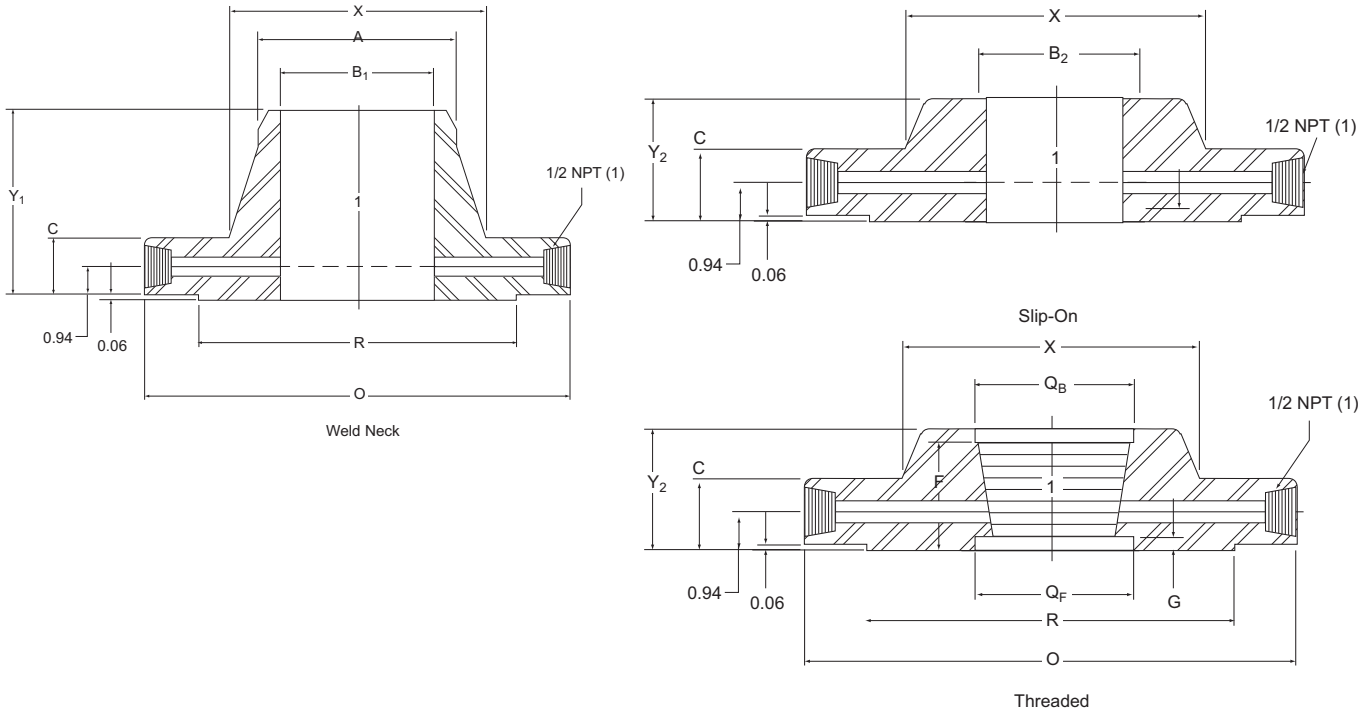

4.6 ASME B16.36-1996

Table 4-1. Class 300 Orifice Flanges, Welding Neck, Slip-On, and Threaded[(1)(2)]

Nominal pipe size	Outside diameter of raised face R	Outside diameter of flange O	Thickness of flange, min. C	Length through hub		Diameter of hub X	Hub diameter beginning of chamfer (W.N.) A	Diameter of counter-bore		Counter-bore depth (from face)		Bore	
				Slip-on and threaded Y_2	Weld neck Y_1			Back Q_B	Face Q_F	F	G	Slip-on B_2	Weld neck B_1
1	2.00	4.88	1.50	1.88	3.25	2.12	1.32	1.41	1.30	1.44	0.75	1.36	
1 1/2	2.88	6.12	1.50	1.88	3.38	2.75	1.90	1.99	1.89	1.47	0.72	1.95	
2	3.62	6.50	1.50	1.94	3.38	3.31	2.38	2.50	2.36	1.50	0.69	2.44	
2 1/2	4.12	7.50	1.50	2.00	3.50	3.94	2.88	3.00	2.84	1.75	0.56	2.94	See note[(3)]
3	5.00	8.25	1.50	2.06	3.50	4.62	3.50	3.63	3.46	1.81	0.56	3.57	
4	6.19	10.00	1.50	2.12	3.62	5.75	4.50	4.63	4.45	1.88	0.56	4.57	
6	8.50	12.50	1.50	2.12	3.94	8.12	6.63	6.75	6.57	1.88	0.31	6.72	
8	10.62	15.00	1.62	2.44	4.38	10.25	8.63	8.75	8.55	2.19	0.44	8.72	
10	12.75	17.50	1.88	2.62	4.62	1262	10.75	See note[(4)]				10.88	
12	15.00	20.50	2.00	2.88	5.12	14.75	12.75					12.88	
14	16.25	23.00	2.12	3.00	5.62	16.75	14.00					14.14	
16	18.50	25.50	2.25	3.25	5.75	19.00	16.00					16.16	
18	21.00	28.00	2.38	3.50	6.25	21.00	18.00					18.18	
20	23.00	30.50	2.50	3.75	6.38	23.12	20.00					20.20	
24	27.25	36.00	2.75	4.19	6.62	27.62	24.00					24.25	

Nominal pipe size	Diameter of pressure connection TT	Drilling template				Bolt length[(5)(6)]	
		Bolt circle	Number of holes	Diameter of holes	Diameter of bolts	Machine bolts	Stud bolts
1	1/4	3.50	4	0.69	5/8	4.50	5.00
1 1/2	1/4	4.50	4	0.81	3/4	4.75	5.25
2	1/4	5.00	8	0.69	5/8	4.50	5.00
2 1/2	1/4	5.88	8	0.81	3/4	4.75	5.25
3	3/8	6.62	8	0.81	3/4	4.75	5.25
4	1/2	7.88	8	0.81	3/4	4.75	5.25
6	1/2	10.62	12	0.88	3/4	4.75	5.25
8	1/2	13.00	12	1.00	7/8	5.00	5.75
10	1/2	15.25	16	1.12	1	5.75	6.50
12	1/2	17.75	16	1.25	1 1/8	6.25	7.00
14	1/2	20.25	20	1.25	1 1/8	6.50	7.25
16	1/2	22.50	20	1.38	1 1/4	7.00	7.75
18	1/2	24.75	24	1.38	1 1/4	7.25	8.00
20	1/2	27.00	24	1.38	1 1/4	7.50	8.50
24	1/2	32.00	24	1.62	1 1/2	8.25	9.50

(1) Weld neck flanges NPS 3 and smaller are identical to Class 600 flanges and may be so marked.
(2) All other dimensions are in accordance with ASME B16.5.
(3) Threaded flanges are furnished in NPS 1-8 only.
(4) Bore diameter of weld neck flanges is to be specified by the purchaser.
(5) Bolt lengths include allowance for orifice and gasket thickness of 0.25 in. for NPS 1-12 and 0.38 in. for NPS 14-24.
(6) In conformance with ASME B16.5, stud bolt lengths do not include point heights.

Figure 4-3. Class 600

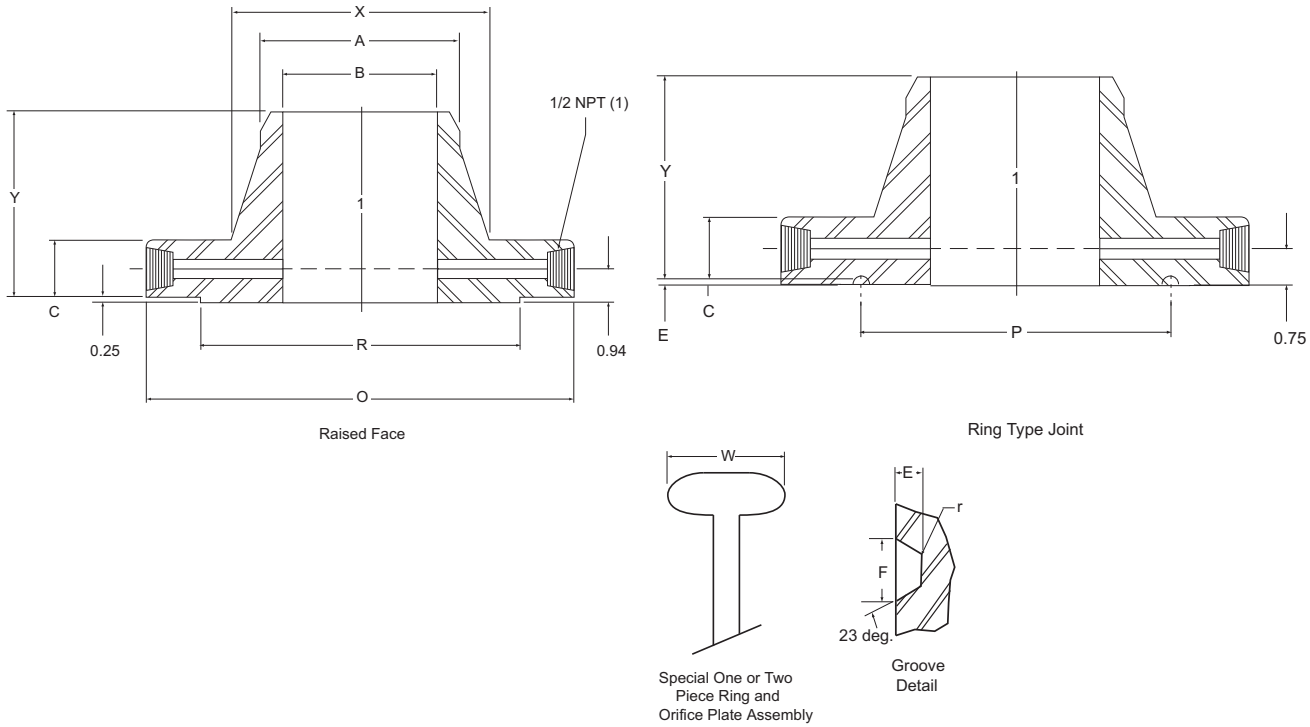

Table 4-2. Class 600 Orifice Flanges, Welding Neck[(1)(2)]

Nominal pipe size	Outside diameter of raised face R	Outside diameter of flange O	Thickness of flange, min. C	Length through hub Y	Height of raised face H	Ring type joint						Diameter of hub X	Hub diameter Beginning of chamfer A
						Groove number	Pitch diameter P	Groove depth E	Groove width F	Radius at bottom r_{max}	Special oval ring height W		
1	2.00	4.88	1.44	3.19	0.06	R16	2.000	0.250	0.344	0.03	1.00	2.12	1.32
1 1/2	2.88	6.12	1.44	3.32	0.06	R20	2.688	0.250	0.344	0.03	1.00	2.75	1.90
2	3.62	6.50	1.44	3.32	0.06	R23	3.250	0.312	0.469	0.03	1.06	3.31	2.38
2 1/2	4.12	7.50	1.44	3.44	0.06	R26	4.000	0.312	0.469	0.03	1.06	3.94	2.88
3	5.00	8.25	1.44	3.44	0.06	R31	4.875	0.312	0.469	0.03	1.06	4.62	3.50
4	6.19	10.75	1.50	4.00	0.25	R37	5.875	0.312	0.469	0.03	1.06	6.00	4.50
6	8.50	14.00	1.88	4.62	0.25	R45	8.312	0.312	0.469	0.03	1.06	8.75	6.63
8	10.62	16.50	2.19	5.25	0.25	R49	10.625	0.312	0.469	0.03	1.06	10.75	8.63
10	12.75	20.00	2.50	6.00	0.25	R53	12.750	0.312	0.469	0.03	1.06	13.50	10.75
12	15.00	22.00	2.62	6.12	0.25	R57	15.000	0.312	0.469	0.03	1.06	15.75	12.75
14	16.25	23.75	2.75	6.50	0.25	R61	16.500	0.312	0.469	0.03	1.06	17.00	14.00
16	18.50	27.00	3.00	7.00	0.25	R65	18.500	0.312	0.469	0.03	1.19	19.50	16.00
18	21.00	29.25	3.25	7.25	0.25	R69	21.000	0.312	0.469	0.03	1.19	21.50	18.00
20	23.00	32.00	3.50	7.50	0.25	R73	23.000	0.375	0.531	0.06	1.25	24.00	20.00
24	27.25	37.00	4.00	8.00	0.25	R77	27.250	0.438	0.656	0.06	1.44	28.25	24.00

Nominal pipe size[(1)(2)]	Bore B	Diameter of pressure connection TT	Drilling template				Diameter of bolts	Length of stud bolts[(3)(4)]	
			Bolt circle	Number of holes	Diameter of holes			Raised face	Ring joint
					Raised face	Ring joint			
1		1/4	3.50	4	0.69	0.75	5/8	5.00	5.50
1 1/2		1/4	4.50	4	0.81	0.88	3/4	5.25	5.50
2		1/4	5.00	8	0.69	0.75	5/8	5.00	5.50
2 1/2		1/4	5.88	8	0.81	0.88	3/4	5.25	5.75
3		3/8	6.62	8	0.81	0.88	3/4	5.25	5.75
4	See note[(5)]	1/2	8.50	8	1.00	1.00	7/8	6.00	6.50
6		1/2	11.50	12	1.12	1.12	1	7.00	7.50
8		1/2	13.75	12	1.25	1.25	1 1/8	7.75	8.25
10		1/2	17.00	16	1.38	1.38	1 1/4	8.75	9.25
12		1/2	19.25	20	1.38	1.38	1 1/4	9.00	9.50
14		1/2	20.75	20	1.50	1.50	1 3/8	9.50	10.00
16		1/2	23.75	20	1.62	1.62	1 1/2	10.25	10.75
18		1/2	25.75	20	1.75	1.75	1 5/8	11.00	11.50
20		1/2	28.50	24	1.75	1.75	1 5/8	11.75	12.50
24		1/2	33.00	24	2.00	2.00	1 7/8	13.25	13.75

(1) Weld neck flanges NPS 3 and smaller are identical to Class 300 flanges except for bolting and may be used for such service.
(2) All other dimensions are in accordance with ASME B16.5.
(3) Bolt lengths for raised face flanges include allowance for orifice and gasket thickness of 0.25 in. for NPS 1-12 and 0.38 in. for NPS 14-24. Bolt lengths for ring type joint flanges include allowance of 0.62 in. for NPS 1-10, 0.75 in. for NPS 12-18, and 0.88 in. for NPS 20.
(4) In conformance with ASME B16.5, stud bolt lengths do not include point heights.
(5) Bore is to be specified by the purchaser.

Figure 4-4. Class 900

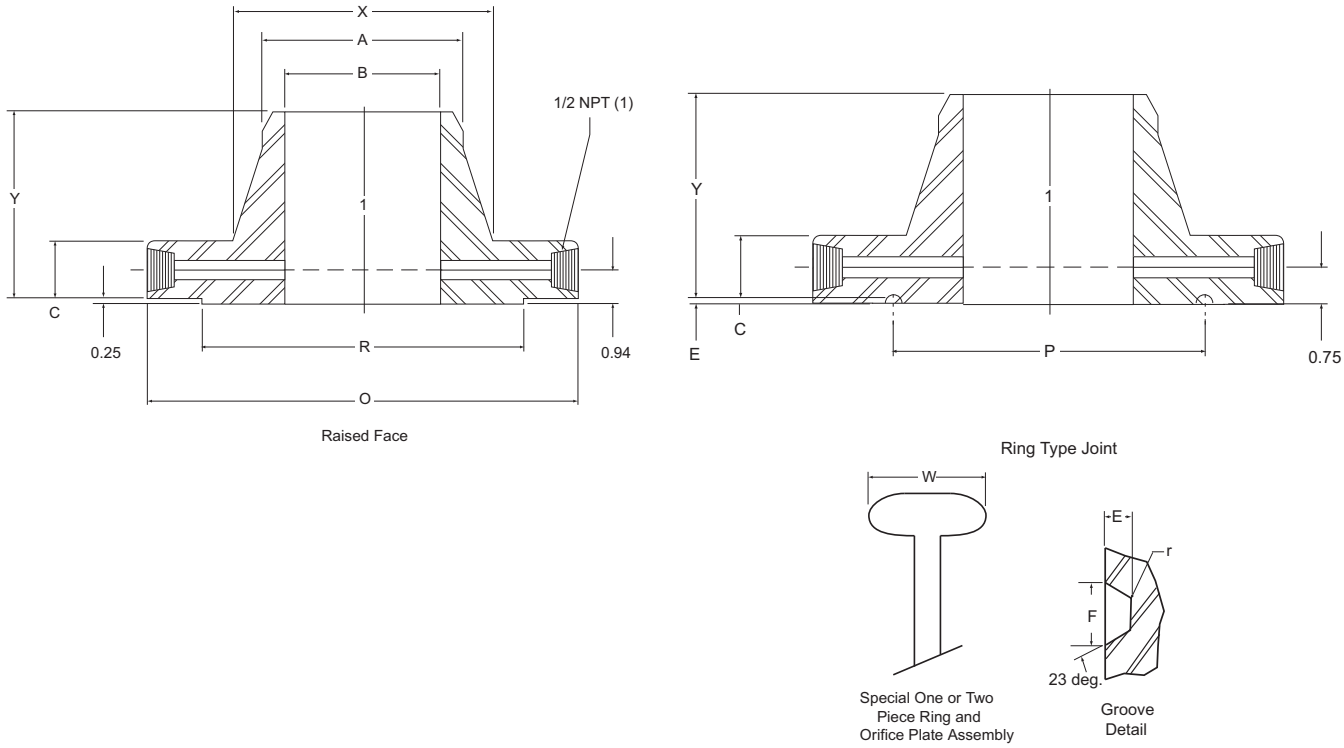

Table 4-3. Class 900 Orifice Flanges, Welding Neck[1]

Nominal pipe size	Outside diameter of raised face R	Outside diameter of flange O	Thickness of flange, min. C	Length through hub Y	Ring type joint						Diameter of hub X	Hub diameter beginning of chamfer A
					Groove number	Pitch diameter P	Groove depth E	Groove width F	Radius at bottom r_{max}	Special oval ring height W		
1	For Nominal Pipe Size (NPS) 2 1/2 and smaller, use Class 1500.											
1 1/2												
2												
2 1/2												
3	5.00	9.50	1.50	4.00	R31	4.875	0.312	0.469	0.03	1.06	5.00	3.50
4	6.19	11.50	1.75	4.50	R37	5.875	0.312	0.469	0.03	1.06	6.25	4.50
6	8.50	15.00	2.19	5.50	R45	8.312	0.312	0.469	0.03	1.06	9.25	6.63
8	10.62	18.50	2.50	6.38	R49	10.625	0.312	0.469	0.03	1.06	11.75	8.63
10	12.75	21.50	2.75	7.25	R53	12.750	0.312	0.469	0.03	1.06	14.50	10.75
12	15.00	24.00	3.12	7.88	R57	15.000	0.312	0.469	0.03	1.06	16.50	12.75
14	16.25	25.25	3.38	8.38	R62	16.500	0.438	0.656	0.06	1.31	17.75	14.00
16	18.50	27.75	3.50	8.50	R66	18.500	0.438	0.656	0.06	1.44	20.00	16.00
18	21.00	31.00	4.00	9.00	R70	21.000	0.500	0.781	0.06	1.56	22.25	18.00
20	23.00	33.75	4.25	9.75	R74	23.000	0.500	0.781	0.06	1.56	24.50	20.00
24	27.25	41.00	5.50	11.50	R78	27.250	0.625	1.062	0.09	1.88	29.50	24.00

Nominal pipe size[1]	Bore B	Diameter of pressure connection TT	Drilling template				Length of stud bolts[2][3]	
			Diameter of bolt circle	Number of holes	Diameter of holes	Diameter of bolts	Raised face	Ring joint
1	For Nominal Pipe Size (NPS) $2^1/_2$ and smaller, use Class 1500.							
$1^1/_2$								
2								
$2^1/_2$								
3	See note[4]	$^3/_8$	7.50	8	7.50	$^7/_8$	6.00	6.50
4		$^1/_2$	9.25	8	9.25	$1^1/_8$	7.00	7.50
6		$^1/_2$	12.50	12	12.50	$1^1/_8$	7.75	8.25
8		$^1/_2$	15.50	12	15.50	$1^3/_8$	9.00	9.50
10		$^1/_2$	18.50	16	18.50	$1^3/_8$	9.50	10.00
12		$^1/_2$	21.00	20	21.00	$1^3/_8$	10.25	10.75
14		$^1/_2$	22.00	20	22.00	$1^1/_2$	11.00	11.50
16		$^1/_2$	24.25	20	24.25	$1^5/_8$	11.50	12.00
18		$^1/_2$	27.00	20	27.00	$1^7/_8$	13.00	13.75
20		$^1/_2$	29.50	20	29.50	2	14.00	14.75
24		$^1/_2$	35.50	20	35.50	$2^1/_2$	17.50	18.50

(1) All other dimensions are in accordance with ASME B16.5.
(2) In conformance with ASME B16.5, stud bolt lengths do not include point heights.
(3) Bolt lengths for raised face flanges include allowance for orifice and gasket thickness of 0.25 in. for NPS 3-12 and 0.38 in. for NPS 14-24. Bolt lengths for ring type joint flanges include allowance of 0.62 in. for NPS 3-10 and 0.75 in. for NPS 12.
(4) Bore is to be specified by the purchaser.

Figure 4-5. Class 1500

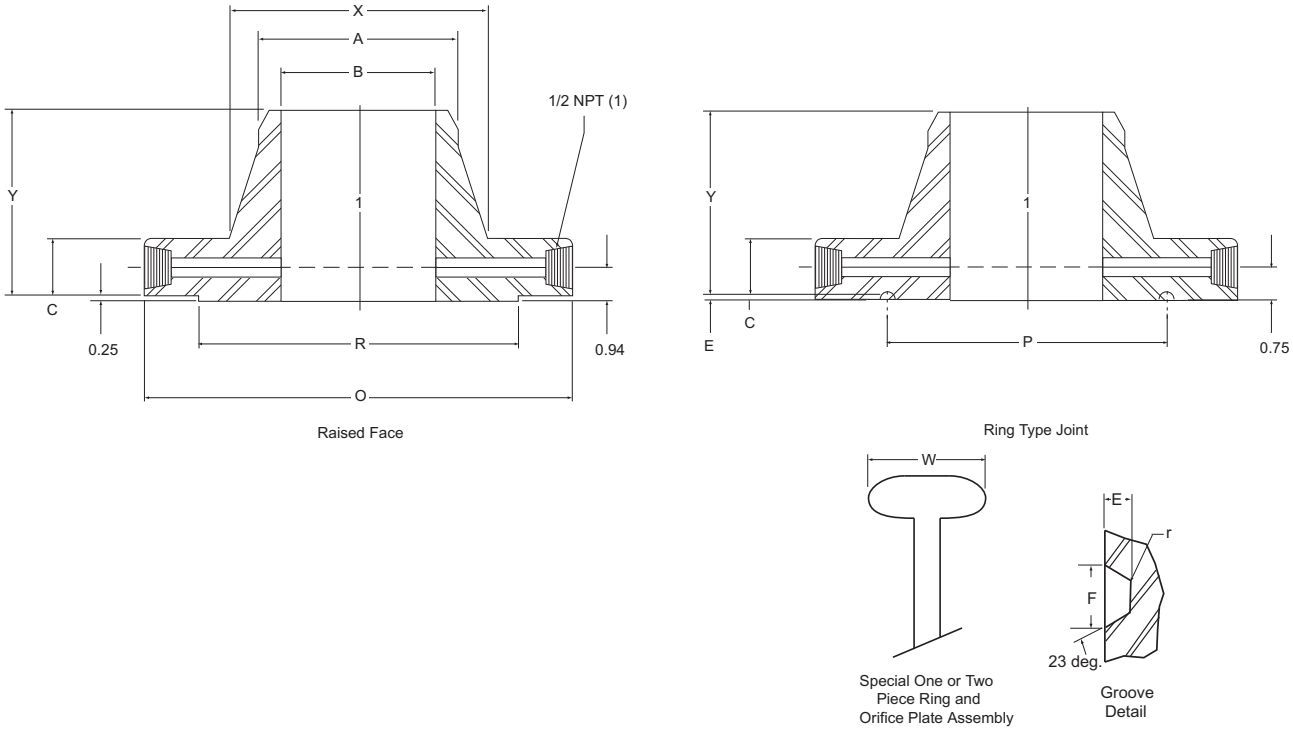

Table 4-4. Class 1500 Orifice Flanges, Welding Neck[1]

Nominal pipe size	Outside diameter of raised face R	Outside diameter of flange O	Thickness of flange, min. C	Length through hub Y	Ring type joint						Diameter of hub X	Hub diameter beginning of chamfer A
					Groove number	Pitch diameter P	Groove depth E	Groove width F	Radius at bottom r_{max}	Special oval ring height W		
1	2.00	5.88	1.50	3.25	R16	2.000	0.250	0.344	0.03	1.00	2.06	1.32
1 1/2	2.88	7.00	1.50	3.50	R20	2.688	0.250	0.344	0.03	1.00	2.75	1.90
2	3.62	8.50	1.50	4.00	R24	3.750	0.312	0.469	0.03	1.06	4.12	2.38
2 1/2	4.12	9.62	1.62	4.12	R27	4.250	0.312	0.469	0.03	1.06	4.88	2.88
3	5.00	10.50	1.88	4.62	R35	5.375	0.312	0.469	0.03	1.06	5.25	3.50
4	6.19	12.25	2.12	4.88	R39	6.375	0.312	0.469	0.03	1.06	6.38	4.50
6	8.50	15.50	3.25	6.75	R46	8.312	0.375	0.531	0.06	1.12	9.00	6.63
8	10.62	19.00	3.62	8.38	R50	10.625	0.438	0.656	0.06	1.31	11.50	8.63
10	12.75	23.00	4.25	10.00	R54	12.750	0.438	0.656	0.06	1.31	14.50	10.75
12	15.00	26.50	4.88	11.12	R58	15.000	0.562	0.806	0.06	1.56	17.75	12.75
14	16.25	29.50	5.25	11.75	R63	16.500	0.625	1.062	0.09	1.75	19.50	14.00
16	18.50	32.50	5.75	12.25	R67	18.500	0.688	1.188	0.09	2.00	21.75	16.00
18	21.00	36.00	6.38	12.88	R71	21.000	0.688	1.188	0.09	2.00	23.50	18.00
20	23.00	38.75	7.00	14.00	R75	23.000	0.688	1.312	0.09	2.12	25.25	20.00
24	27.25	46.00	8.00	16.00	R79	27.250	0.812	1.438	0.09	2.31	30.00	24.00

Nominal pipe size[1]	Bore B	Diameter of pressure connection TT	Drilling template				Length of stud bolts[2][3]	
			Diameter of bolt circle	Number of holes	Diameter of holes	Diameter of bolts	Raised face	Ring joint
1	See note[4]	1/4	4.00	4	1.00	7/8	6.00	6.25
1 1/2		1/4	4.88	4	1.12	1	6.25	6.50
2		1/4	6.50	8	1.00	7/8	6.00	6.50
2 1/2		1/4	7.50	8	1.12	1	6.50	7.00
3		3/8	8.00	8	1.25	1 1/8	7.25	7.25
4		1/2	9.50	8	1.38	1 1/4	8.00	8.50
6		1/2	12.50	12	1.50	1 3/8	10.50	11.00
8		1/2	15.50	12	1.75	1 5/8	11.75	12.25
10		1/2	19.00	12	2.00	1 7/8	13.50	14.00
12		1/2	22.50	16	2.12	2	15.00	15.75
14		1/2	25.00	16	2.38	2 1/4	16.25	17.52
16		1/2	27.75	16	2.62	2 1/2	17.75	19.00
18		1/2	30.50	16	2.88	2 3/4	19.75	21.00
20		1/2	32.75	16	3.12	3	21.50	22.50
24		1/2	39.00	16	3.62	3 1/2	24.50	26.00

(1) All other dimensions are in accordance with ASME B16.5.
(2) Bolt lengths for raised face flanges include allowance for orifice and gasket thickness of 0.25 in. for NPS 1-12 and 0.38 in. for NPS 14-24. Bolt lengths for ring type joint flanges include allowance of 0.62 in. for NPS 1-10, 0.75 in. for NPS 12-18, and 0.88 in. for NPS 20.
(3) In conformance with ASME B16.5, stud bolt lengths do not include point heights.
(4) Bore is to be specified by the purchaser.

Figure 4-6. Class 2500

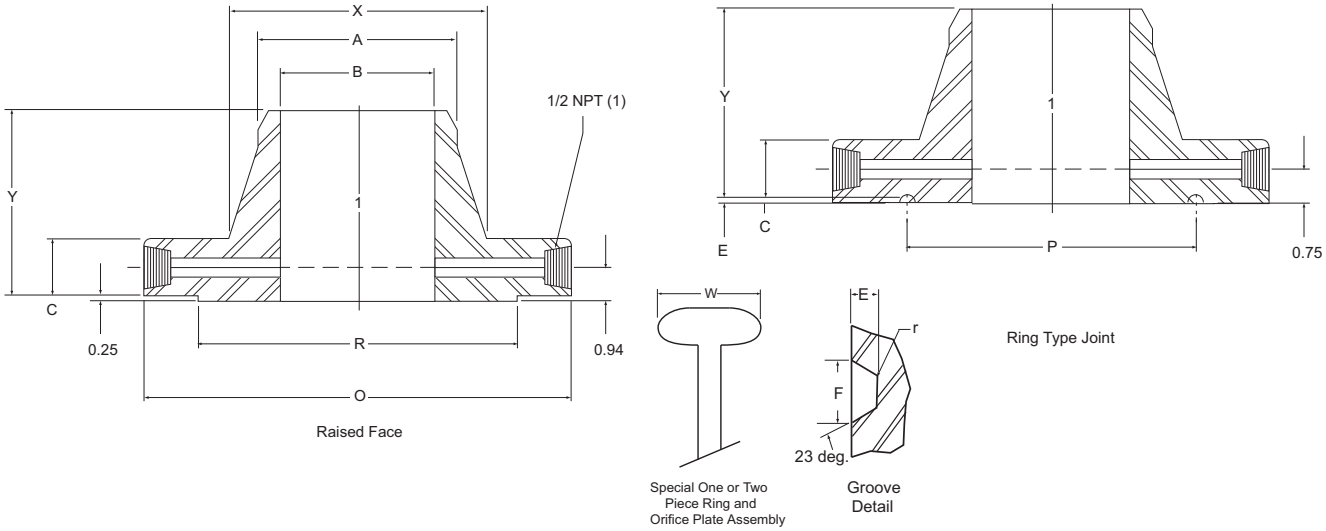

Table 4-5. Class 2500 Orifice Flanges, welding neck[1]

Nominal pipe size	Outside diameter of raised face R	Outside diameter of flange O	Thickness of flange, min. C	Length through hub Y	Ring type joint						Diameter of hub X	Hub diameter beginning of chamfer A
					Groove number	Pitch diameter P	Groove depth E	Groove width F	Radius at bottom r_{max}	Special oval ring height W		
1	2.00	6.25	1.50	3.62	R18	2.375	0.250	0.344	0.03	1.00	2.25	1.32
1.5	2.88	8.00	1.75	4.38	R23	3.250	0.312	0.469	0.03	1.06	3.12	1.90
2	3.62	9.25	2.00	5.00	R26	4.000	0.312	0.469	0.03	1.06	3.75	2.38
2.5	4.12	10.50	2.25	5.62	R28	4.375	0.375	0.531	0.06	1.19	4.50	2.88
3	5.00	12.00	2.62	6.62	R32	5.000	0.375	0.531	0.06	1.19	5.25	3.50
4	6.19	14.00	3.00	7350	R38	6.188	0.438	0.656	0.06	1.31	6.50	4.50
6	8.50	19.00	4.25	10.75	R47	9.000	0.500	0.781	0.06	1.31	6.50	4.50
8	10.62	21.75	5.00	12.50	R51	11.000	0.562	0.906	0.06	1.56	12.00	8.63
10	12.75	26.50	6.50	16.50	R55	13.500	0.688	1.188	0.09	1.88	14.75	10.75
12	15.00	30.00	7.25	18.25	R60	16.000	0.688	1.312	0.09	2.00	17.38	12.75

Nominal pipe size	Bore B	Diameter of pressure connection TT	Drilling template				Length of stud bolts[2][3]	
			Diameter of bolt circle	Number of holes	Diameter of holes	Diameter of bolts	Raised face	Ring joint
1		1/4	4.25	4	1.00	7/8	6.00	6.25
1.5		1/4	5.75	4	1.25	1 1/8	7.00	7.50
2		1/4	6.75	8	1.12	1	7.25	7.75
2.5	See note[4]	1/4	7.75	8	1.25	1 1/8	8.00	8.50
3		3/8	9.00	8	1.38	1 1/4	9.00	9.50
4		1/2	10.75	8	1.62	1 1/2	10.25	10.75
6		1/2	14.50	8	2.12	2	13.75	14.50
8		1/2	17.25	12	2.12	2	15.25	16.00
10		1/2	21.25	12	2.62	2 1/2	19.25	20.25
12		1/2	24.38	12	2.88	2 3/4	21.25	22.50

(1) All other dimensions are in accordance with ASME B16.5.
(2) Bolt lengths for raised face flanges include allowance for orifice and gasket thickness of 0.25 in. for NPS 1-12 and 0.38 in. for NPS 14-24. Bolt lengths for ring type joint flanges include allowance of 0.62 in. for NPS 1-10, 0.75 in. for NPS 12-18, and 0.88 in. for NPS 20.
(3) In conformance with ASME B16.5, stud bolt lengths do not include point heights.
(4) Bore is to be specified by the purchaser.

4.7 1496 weights (estimated)

Weights are in pounds (kilograms). Estimated weight based on:

- ANSI schedule standard pipe
- Carbon Steel materials of construction
- Flange tap design
- Any deviation in configuration may affect estimated weights.

Flange ratings		Line size						
		2 in. (50 mm)	2.5 in. (64 mm)	3 in. (80 mm)	4 in. (100 mm)	6 in. (150 mm)	8 in. (200 mm)	10 in. (250 mm)
ANSI	150	12 (5.44)	16 (7.27)	20 (9.09)	30 (13.64)	48 (21.82)	78 (35.45)	104 (47.27)
	300	18 (8.18)	24 (10.91)	30 (13.64)	50 (22.73)	84 (38.18)	134 (60.91)	182 (82.73)
	600	24 (10.91)	36 (16.36)	46 (20.91)	84 (38.18)	162 (73.64)	240 (109.09)	380 (172.73)
	900	50 (22.73)	72 (32.73)	82 (37.27)	102 (46.36)	220 (100.00)	350 (159.09)	520 (236.36)
	1500	50 (22.73)	72 (32.73)	96 (43.64)	146 (66.36)	330 (150.00)	550 (250.00)	910 (413.64)
	2500	84 (38.18)	104 (47.27)	188 (85.45)	290 (131.82)	760 (345.45)	1160 (527.27)	2150 (977.27)
RTJ	300	19 (8.64)	25 (11.36)	31 (14.09)	51 (23.18)	85 (38.63)	136 (61.82)	184 (83.64)
	600	25 (11.36)	37 (16.82)	47 (21.36)	85 (38.64)	163 (74.09)	242 (110.00)	382 (173.64)
	900	51 (23.18)	73 (33.18)	83 (37.73)	103 (46.82)	221 (100.45)	352 (160.00)	522 (237.27)
	1500	51 (23.18)	73 (33.18)	97 (44.09)	147 (66.82)	331 (150.45)	552 (250.91)	912 (414.54)
	2500	85 (38.64)	105 (47.73)	189 (85.91)	291 (132.27)	761 (345.91)	1162 (528.18)	2152 (978.18)

Flange ratings		Line size						
		12 in. (300 mm)	14 in. (350 mm)	16 in. (400 mm)	18 in. (450 mm)	20 in. (500 mm)	22 in. (550 mm)	24 in. (600 mm)
ANSI	150	160 (72.72)	220 (99.79)	280 (127.00)	300 (136.08)	360 (163.29)	450 (204.12)	520 (235.87)
	300	280 (127.27)	360 (163.29)	500 (226.79)	640 (290.30)	800 (362.87)	930 (421.84)	1160 (526.17)
	600	450 (204.54)	560 (254.01)	780 (353.80)	950 (430.91)	1180 (535.23)	1440 (653.17)	1660 (752.96)
	900	650 (295.45)	800 (362.87)	990 (449.05)	1360 (616.88)	1660 (752.96)	2500 (1133.98)	3000 (1360.77)
	1500	1380 (627.27)	1880 (852.75)	2500 (1133.98)	3250 (1474.17)	4100 (1859.72)	5200 (2358.68)	6650 (3016.38)
	2500	3050 (1386.36)	4050 (1837.04)	5100 (2313.32)	6450 (2925.67)	7200 (3265.86)	8250 (3742.13)	9300 (4218.40)
RTJ	300	282 (128.18)	362 (164.20)	503 (228.16)	643 (291.66)	803 (364.23)	933 (423.20)	1164 (527.98)
	600	452 (205.45)	562 (254.92)	783 (355.16)	953 (432.27)	1183 (536.60)	1443 (654.53)	1664 (754.78)
	900	652 (296.36)	802 (363.78)	993 (450.42)	1363 (618.24)	1663 (754.32)	2500 (1133.98)	3004 (1362.59)
	1500	1382 (628.18)	1882 (853.66)	2503 (1135.34)	3253 (1475.53)	4103 (1861.09)	5100 (2313.32)	6654 (3018.20)
	2500	3052 (1387.27)	4100 (1859.73)	5150 (2335.99)	6200 (2812.27)	7300 (3311.22)	8400 (3810.17)	9400 (4263.76)

Appendix A Specifications and reference data

Specifications . . . . . page 35
Physical specifications . . . . . page 36
Sizing and how to order . . . . . page 40
Rosemount 1495 configuration . . . . . page 42
Rosemount 1496 configuration . . . . . page 46

A.1 Specifications

A.1.1 Functional specifications

Service and flow range

Liquid, gas or vapor turbulent flow, for pipe Reynold's Numbers greater than the following:
AGA-3: 4,000
ASME MFC-3M: 5,000
ISO-5167: 5,000

Orifice plate operating limitations

Temperature limit:

Based on flange rating per ANSI B16.5

Maximum working pressure:

Based on flange rating per ANSI B16.5

Service and flow range

Liquid, gas or vapor turbulent flow, for pipe Reynold's Numbers within ISO 5167, AGA Report No. 3/ API 14.3.2, and ASME MFC-3M specifications.

Pipe sizes

2-in. to 24-in. (50 mm to 600 mm). Contact Emerson Process Management for pipe sizes less than 2-in. (50 mm) or greater than 24-in. (600 mm).Operating Limits

1495 Temperature Range:

- –320 to 800 °F (–196 to 427 °C) and differential pressure up to 800 in$H_2$0
- 800s to 1200 °F (427 to 649 °C) and differential pressure up to 400 in$H_2$0

1496 Temperature Range:

- –320 to 1000 °F (–196 to 538 °C)

A.1.2 Physical specifications

Standard pipe schedules

Table 1. Default pipe schedules for 1496 Orifice Flange Unions

Pipe size[1]	ANSI 300# (WN, TH, SO)	ANSI 600# (WN, RJ)	ANSI 900# (WN, RJ)	ANSI 1500# (WN, RJ)	ANSI 2500# (WN, RJ)
2 (50.8)	40/Standard[3]	40/Standard[3]	80/XS[2]	160	XXS
2½ (63.5)	40/Standard[3]	40/Standard[3]	80/XS[2]	160	XXS
3 (76.2)	40/Standard[3]	40/Standard[(3]	80/XS[2]	160/XXS	No default schedule provided - customer must specify pipe schedule.
4 (101.6)	40/Standard[3]	40/Standard[3]	80/XS[2]	160/XXS	
6 (152.4)	40/Standard[3]	80[2]	160	XXS	
8 (203.2)	40/Standard[3]	80[2]	160	No default schedule provided - customer must specify pipe schedule.	
10 (254)	40/Standard[3]	80[2]	160		
12 (304.8)	40/Standard[3]	80[2]	160		
14 (355.6)	Standard	80[2]	160		
16 (406.4)	XS	80[2]	160		
18 (457.2)	XS	80[2]	160		
20 (508)	XS	80[2]	160		
24 (609.6)	40[3]	80[2]	160		

(1) Measurement is in inches (millimeters).
(2) Flange Unions are supplied with Schedule 80S if 316/316L SST or 304/304L SST materials are selected.
(3) Flange Unions are supplied with Schedule 40S if 316/316L SST or 304/304L SST materials are selected.

NOTE
It is strongly encouraged to use the ordering codes to specify desired pipe schedule.

Table 2. Dimensions of pipe inner diameter(1)

Nominal pipe size	Schedule					
	5S	10	10S	20	30	40
2 (51)	2.245 (57.02)	2.157 (54.79)	2.157 (54.79)	–	–	2.067 (52.501)
2½- (64)	2.709 (68.81)	2.635 (66.93)	2.635 (66.93)	–	–	2.469 (62.71)
3 (76)	2.224 (56.49)	3.26 (82.80)	3.26 (82.80)	–	–	3.068 (77.93)
4 (102)	4.334 (110.08)	4.26 (108.20)	4.26 (108.20)	–	–	4.026 (102.26)
6 (152)	6.407 (162.74)	6.357 (161.47)	6.357 (161.47)	–	–	6.065 (154.05)
8 (203)	8.407 (213.54)	8.329 (211.56)	8.329 (211.56)	8.125 (206.38)	8.071 (205)	7.981 (202.72)
10 (254)	10.482 (266.24)	10.42 (264.67)	10.42 (264.67)	10.25 (260.35)	10.136 (257.45)	10.20 (254.51)
12 (305)	12.438 (315.93)	12.39 (314.71)	12.39 (314.71)	12.25 (311.15)	12.09 (307.09)	11.938 (303.23)
14 (356)	–	13.5 (342.90)	13.624 (346.05)	13.376 (339.75)	13.25 (336.55)	13.124 (333.35)
16 (406)	–	15.5 (393.70)	15.624 (396.85)	15.376 (390.55)	15.25 (387.35)	15.0 (381.0)
18 (457)	–	17.5 (444.50)	17.624 (447.65)	17.376 (441.35)	17.126 (435.00)	16.976 (431.19)
20 (508)	–	19.5 (495.30)	19.564 (496.93)	19.25 (488.95)	19.0 (482.60)	18.814 (477.88)
24 (610)	–	23.5 (596.90)	23.5 (596.90)	23.25 (590.55)	22.876 (581.05)	22.626 (574.70)

Nominal pipe size	Schedule					
	40S	Standard	60	80	80S	XS
2 (51)	2.067 (52.501)	2.067 (52.50)	–	1.939 (49.25)	1.939 (49.25)	1.939 (49.25)
2½- (64)	2.469 (62.71)	2.469 (62.71)	–	2.323 (59.0)	2.323 (59.0)	2.323 (59.0)
3 (76)	3.068 (77.93)	3.068 (77.93)	–	2.90 (73.66)	2.90 (73.66)	2.90 (73.66)
4 (102)	4.026 (102.26)	4.026 (102.26)	–	3.826 (97.18)	3.826 (97.18)	3.826 (97.18)
6 (152)	6.065 (154.05)	6.065 (154.05)	–	5.761 (146.33)	5.761 (146.33)	5.761 (146.33)
8 (203)	7.981 (202.72)	7.981 (202.72)	7.813 (198.45)	7.625 (193.68)	7.625 (193.68)	7.625 (193.68)
10 (254)	10.02 (254.51)	10.20 (259.08)	9.75 (247.65)	9.564 (242.94)	9.75 (247.65)	9.75 (247.65)
12 (305)	12.0 (304.8)	12.00 (304.80)	11.626 (41.30)	11.376 (288.95)	11.75 (298.45)	11.75 (298.45)
14 (356)	–	13.250 (336.55)	12.814 (325.48)	12.50 (317.50)	–	13.0 (330.20)
16 (406)	–	15.250 (387.35)	14.688 (373.08)	14.314 (363.58)	–	15.0 (381.0)
18 (457)	–	17.250 (438.15)	16.5 (419.10)	16.126 (409.60)	–	17.0 (425.0)
20 (508)	–	19.252 (488.95)	18.376 (466.75)	17.938 (455.63)	–	19.0 (482.60)
24 (610)	–	23.250 (590.55)	22.064 (560.43)	21.564 (547.73)	–	23.0 (584.20)

Nominal pipe size	Schedule				
	100	120	140	160	XXS
2 (51)	–	–	–	1.689 (42.9)	1.503 (38.18)
2½- (64)	–	–	–	2.125 (53.98)	1.771 (44.98)
3 (76)	–	–	–	2.624 (66.65)	2.30 (58.42)
4 (102)	–	3.624 (92.005)	–	3.438 (87.33)	3.152 (80.06)
6 (152)	–	5.501 (139.73)	–	5.189 (131.80)	4.897 (124.38)
8 (203)	7.437 (188.90)	7.189 (157.15)	7.001 (177.83)	6.813 (173.05)	6.875 (174.63)
10 (254)	9.314 (236.58)	9.064 (230.23)	8.75 (222.25)	8.50 (215.90)	–
12 (305)	11.064 (281.03)	10.75 (273.05)	10.5 (266.70)	10.126 (257.20)	–
14 (356)	12.126 (308.00)	11.814 (300.08)	11.5 (37.50)	11.188 (284.18)	–
16 (406)	13.938 (354.03)	13.564 (344.53)	13.124 (333.35)	12.814 (325.48)	–
18 (457)	15.688 (398.27)	15.25 (387.35)	14.876 (377.85)	14.438 (366.73)	–
20 (508)	17.44 (443.98)	17.0 (431.80)	16.5 (410.10)	16.064 (408.03)	–
24 (610)	20.938 (531.83)	20.376 (517.55)	19.876 (504.85)	19.314 (490.58)	–

(1) Measurement is in inches (millimeters).

NOTE
For option code J1 - Canadian Registration Number, J2 - ANSI B31.1, J3 - ANSI B31.3, and J4 - ANSI B31.8, contact an Emerson Process Management representative for details.

Materials of construction

1495 Orifice plate

304/304L or 316/316L Stainless Steel ASTM A240; DIN 1.4571 (316Ti SST)[(1)]; Alloy C-276 ASTM B575; or Alloy 400 ASTM B127.

Orifice bore sizes

Standard bore sizes are in 1/8-in. (3.2 mm) increments from ½-in. (12.7 mm) to 4-in. (101.6 mm) and in 1/4-in. (6.3 mm) increments from 4 1/4 to 6-in. (107.95 mm to 152.4 mm).

If required, Emerson Process Management can determine the orifice bore. Basic flow data is required at the time of order, see "Calculation Data Sheet" on page 1.

Bore tolerances are within AGA and ASME specifications. Available options allow the user to have the Rosemount 1495 sized for specific operating conditions. The "Orifice Plate Drawings" on page 6 specifies the physical parameters of the orifice from a detailed sizing calculation.

1496 Flange unions

Orifice Flanges (ANSI B16.36): Carbon Steel ASTM A105 / A350; Stainless Steel ASTM A182; Alloy C-276 ASTM B564/575; or Alloy 400 ASTM B564/127; DIN 1.4571 (316Ti SST)[(1)]; DIN 1.0460 (carbon steel)[(1)].

Flange mounting hardware

- Studs: Carbon Steel ASTM A193 Grade B7M
- Nuts: Carbon Steel ASTM A194 Gr 2H
- Gaskets: Non-asbestos ring type, Durlon® 8500 Green, Klingersil C4400, or equivalent
- Pipe Plugs: Match flange material

Pressure taps

Pressure tap connections are ½ -in. (12.7 mm) NPT and 180° apart as standard. The tap hole diameter is ¼-in. (6.35 mm) for 2-in. (51 mm) size, 3/8-in. (9.6 mm) for 2½ -in. (63.5 mm) size and 3-in. (76.2 mm), and ½-in. (12.7 mm) for 4-in. (101.6 mm) and larger sizes.

(1) *May not be available in all world areas.*

A.1.3 Return of materials

To expedite the return process outside the United States, contact the nearest sales representative.

Within the United States, call the Rosemount National Response Center using the 1-800-654-RSMT (7768) toll-free number. This center, available 24 hours a day, will assist you with any needed information or materials.

The center will ask for product model and serial numbers, and will provide a Return Material Authorization (RMA) number. The center will also ask for the name of the process material to which the product was last exposed.

⚠ CAUTION

People who handle products exposed to a hazardous substance can avoid injury if they are informed and understand the hazard. If the product being returned was exposed to a hazardous substance as defined by OSHA, a copy of the required Material Safety Data Sheet (MSDS) for each hazardous substance identified must be included with the returned goods.

The Rosemount National Response Center will detail the additional information and procedures necessary to return goods exposed to hazardous substances.

A.2 Sizing and how to order

When making a selection, move from left to right, selecting an option in Column 1 and/or either Column 2 or Column 3.

	Column 1	Column 2
	Orifice paddle type	**Flange union**
Paddle type	1495 PC Paddle, square edged, concentric 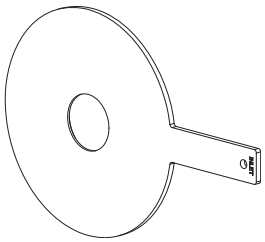	1496 WN Raised Face (RF) Weld Neck (for use with paddle type orifice plates) 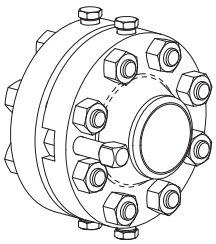
	1495 PG Paddle, square edged, concentric, spiral finish 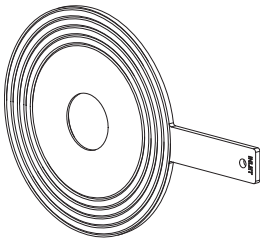	1496 SO / TH Raised Face (RF) Slip On / Threaded (for use with paddle type orifice plates) 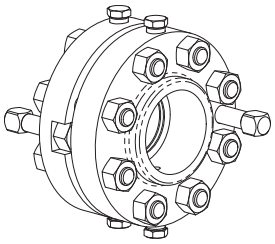
	Orifice universal type	**Flange union**
Universal type	1495 UC Universal, square edged, concentric 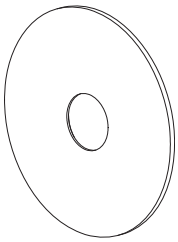	1496 RJ Ring Type Joint (RTJ) Weld Neck (for use with universal orifice plates with plate holder) 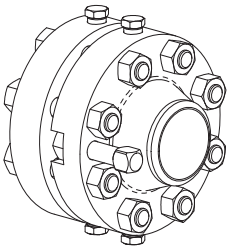

	Column 1	Column 2
	Orifice plate	**Flange union**
	Choose Flange Rating: ANSI Class 300#, 600#, 900#, 1500#, or 2500# DIN flange ratings: PN10, PN16, PN25, PN40, PN63, PN100	ANSI Class 300#, 600#, 900#, 1500#, or 2500# DIN flange ratings: PN10, PN16, PN25, PN40, PN63, PN100
	Material: • SST 316/316L ASTM A240 • SST 304/304L ASTM A240 • SST 316Ti DIN 1.4571 • Alloy C-276 ASTM B575 • Alloy 400 ASTM B564	• CS ASTM A105 or ASTM A350 LF2 • SST 316/316L ASTM A182 • SST 304/304L ASTM A182 • SST 316Ti DIN 1.4571 • Alloy C-276 ASTM B564 • Alloy 400 ASTM B564
	Choose Line Size: • 2 to 24-in. (50 to 600 mm) • Contact Emerson Process Management for lines less than 2-in. (51 mm)	• 2 to 24-in. (50 to 600 mm) • Contact Emerson Process Management for lines less than 2-in. (51 mm)
	Choose Plate Thickness: • Default is 0.125-in. (3.2 mm) for 2 to 6-in (50 to 150 mm) line size • Default is 0.250-in. (6.35 mm) for 8 to 14-in (200 to 350 mm) line size • Default is 0.375-in. (9.53) for 16 to 20-in. (400 to 500 mm) • Default is 0.500-in. (12.7 mm) for 24-in (600 mm) line size	Choose Flange Union Type: • Raised Face Weldneck (1496WN) • Raised Face Threaded (1496TH) • Raised Face Slip-On (1496SO) • RTJ weldneck (1496RJ) • Raised Face DIN Weldneck (1496DN)
	Choose Bore Diameter: Refer to Instrument Toolkit™ for orifice plate sizing. Or, Emerson Process Management will calculate the bore diameter by specifying option code BC in the 1495 ordering table. Include all of the flowing conditions and pipe information for the application on the CDS. See the "Calculation data sheet" for a detailed sizing calculation.	

A.3 Rosemount 1495 configuration

Standard configuration is with a square-edged concentric bore in both paddle and universal type plates. Also available with a spiral finish. Final inspection reports illustrating plate thickness, concentricity, outside dimensions, inside dimensions, roundness, and flatness are available.

- Bore calculations are available if the Configuration Data Sheet (CDS) is completed and Option BC is selected.
- Line sizes larger than 24-in. (609.6 mm) are available. Contact Emerson Process Management.

A.3.1 Ordering information

Table 3. Rosemount 1495 Orifice Plate ordering information

★ The Standard offering represents the most common options. The starred options (★) should be selected for best delivery. The Expanded offering is subject to additional delivery lead time.

Model	Product description	
1495	Orifice Plate Primary	
Orifice plate type		
Standard		**Standard**
PC	Paddle, Concentric	★
PG	Paddle, Concentric, Spiral finish	★
UC	Universal, Concentric	★
Line size		
Standard		**Standard**
020	2 inches (DN50)	★
025	2 1/2 inches (DN65)	★
030	3 inches (DN80)	★
040	4 inches (DN100)	★
060	6 inches (DN150)	★
080	8 inches (DN200)	★
100	10 inches (DN250)	★
120	12 inches (DN300)	★
140	14 inches (DN350)	★
160	16 inches (DN400)	★
180	18 inches (DN450)	★
200	20 inches (DN500)	★
240	24 inches (DN600)	★
Flange rating		
Standard		**Standard**
A1	Flange ANSI Class 150 Raised Face	★
A3	ANSI Class 300 Raised Face	★
A6	ANSI Class 600 Raised Face	★
A9	ANSI Class 900 Raised Face	★
AF	ANSI Class 1500 Raised Face	★
AT[(1)]	ANSI Class 2500 Raised Face	★
D1	DIN PN10	★

Table 3. Rosemount 1495 Orifice Plate ordering information

★ The Standard offering represents the most common options. The starred options (★) should be selected for best delivery. The Expanded offering is subject to additional delivery lead time.

Flange rating		
Standard		**Standard**
D2	DIN PN16	★
D3	DIN PN25	★
D4	DIN PN40	★
D5	DIN PN63[2]	★
D6	DIN PN100	★
Expanded		**Expanded**
R3	Flange ANSI Class 300 Ring Joint	
R6	Flange ANSI Class 600 Ring Joint	
R9	Flange ANSI Class 900 Ring Joint	
RF	Flange ANSI Class 1500 Ring Joint	
RT	Flange ANSI Class 2500 Ring Joint	
Orifice plate material type		
Standard		**Standard**
S	316/316L Stainless Steel	★
T	DIN 1.4571 (316Ti Stainless Steel)	★
L	304/304L Stainless Steel	★
Expanded		**Expanded**
H	Alloy C-276	
M	Alloy 400	
Plate thickness		
Standard		**Standard**
A	0.125-in. (3.2 mm) – default for line size 2 to 6-in. (50 to 150 mm)	★
B	0.250-in. (6.35 mm) – default for line size 8 to 14-in. (200 to 350 mm)	★
C	0.375 in. (9.53 mm) - default for line size 16 to 20-in. (400 to 500 mm)	★
D	0.500-in. (12.7 mm) – default for line size 24-in. (600 mm)	★
E[3]	Plate Thickness per DIN 19206	★
Bore		
Standard		**Standard**
XXXXX	Bore (XXXXX = XX.XXX)	★

Options (include with selected model number)

Bore calculation		
Standard		**Standard**
BC	Bore Calculation	★
Drain / vent hole		
Standard		**Standard**
DV[4]	Drain / Vent Hole	★

Table 3. Rosemount 1495 Orifice Plate ordering information

★ The Standard offering represents the most common options. The starred options (★) should be selected for best delivery. The Expanded offering is subject to additional delivery lead time.

Plate holder		
Standard		**Standard**
PH[5]	Plate Holder for RTJ Flanges	★
Alternate bore type		
Standard		**Standard**
TC	Conical Entrance Bore	★
TE[4]	Eccentric Bore	★
TS[4]	Segmental Bore	★
TQ	Quadrant Edged Bore	★
RO[6]	Restriction Orifice Plate	★
Alternate pipe schedule		
Standard		**Standard**
FA[7]	Schedule 5S	★
FB[7]	Schedule 10	★
FC[7]	Schedule 10S	★
FD[7]	Schedule 20	★
FE[7]	Schedule 30	★
FF[7]	Schedule 40	★
FG[7]	Schedule 40S	★
FH[7]	Schedule Standard (STD)	★
FI[7]	Schedule 60	★
FJ[7]	Schedule 80	★
FK[7]	Schedule 80S	★
FL[7]	Schedule Extra Strong (XS)	★
FM[7]	Schedule 100	★
FN[7]	Schedule 120	★
FP[7]	Schedule 140	★
FQ[7]	Schedule 160	★
FR[7]	Schedule Double Extra Strong (XXS)	★
Special cleaning		
Expanded		**Expanded**
P2	Cleaning for special processes	
Special inspection		
Standard		**Standard**
QC1	Visual and dimensional inspection with certificate	★
QC7	Inspection and performance certificate	★
Material traceability certification		
Standard		**Standard**
Q8	Material certificate per ISO 10474 3.1.B and EN 10204 3.1.B	★

Table 3. Rosemount 1495 Orifice Plate ordering information

★ The Standard offering represents the most common options. The starred options (★) should be selected for best delivery. The Expanded offering is subject to additional delivery lead time.

Code conformance		
Expanded		**Expanded**
J5[8]	NACE MR-0175 / ISO 15156	
Country certification		
Expanded		**Expanded**
J1	Canadian Registration	
Typical model number: 1495 PC 040 A3 S A 02125		

(1) Available in line sizes from 2-12 inches.
(2) Previously PN64.
(3) Standard Plate Thickness:
DN50 - 65 = 3 mm
DN80 – 450 = 4 mm
DN500 - 600 = 6 mm
(4) This option requires pipe I.D. to be specified. Please select alternate pipe schedule option or specify on order.
(5) Integral Plate Holder (material matches plate material) for line sizes to 3-in., requires minimum 1/4-in plate thickness. Screw Type Plate Holder in 304SS for line sizes 4-in. and larger.
(6) A standard beveled orifice plate is provided with the “RO” option code.
(7) These options should only be selected if options DV, TE, or TS are selected. These options are not available with flange rating D1-D6.
(8) Materials of Construction comply with metallurgical requirements highlighted within NACE MR0175/ISO 15156 for sour oil field production environments. Environmental limits apply to certain materials. Consult latest standard for details. Selected materials also conform to NACE MR0103 for sour refining environments.

A.4 Rosemount 1496 configuration

Standard flange styles are raised face (RF) weld neck, RF slip-on, or RF threaded for paddle type orifice plates, and ring type joint (RTJ) weld neck for universal type plates with plate holders. All flange unions are supplied with studs, nuts, jackscrews, gaskets, and pipe plugs. Table 1 lists standard pipe schedules.

- Meets ASME B16.36
- Meets DIN 19214 part 1
- Threaded tap connection provided 180-degrees apart

The following options are available.

- Socket weld tap connections
- High temperature flange gaskets for temperatures greater than 500 °F (260 °F)
- Stainless Steel flange bolting per ASTM A193 Grade B8M/A194 Grade 8M

Flange union
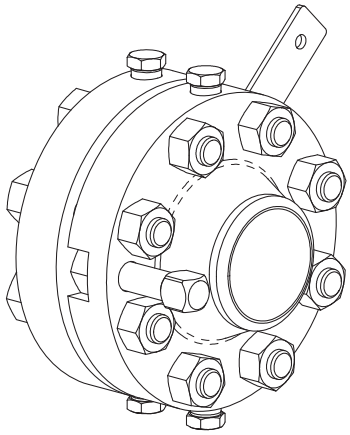

A.4.1 Ordering information

Table 4. Rosemount 1496 Orifice Flange Union ordering table

★ The Standard offering represents the most common options. The starred options (★) should be selected for best delivery. The Expanded offering is subject to additional delivery lead time.

Model	Product description	
1496	Orifice Flange Union	
Flange union type		
Standard		**Standard**
WN	Raised Face, Weld Neck	★
TH	Raised Face, Threaded	★
SO	Raised Face, Slip-On	★
DN	Raised Face, Weld Neck, DIN 19214 Part 1	★
Expanded		**Expanded**
RJ	Ring Joint, Weld Neck	
Line size		
Standard		**Standard**
020	2 inches (DN50)	★
025	2½-inches (DN65)	★
030	3 inches (DN80)	★
040	4 inches (DN100)	★
060	6 inches (DN150)	★
080	8 inches (DN200)	★
100	10 inches (DN250)	★
120	12 inches (DN300)	★
140	14 inches (DN350)	★
160	16 inches (DN400)	★
180	18 inches (DN450)	★
200	20 inches (DN500)	★
240	24 inches (DN600)	★
Flange rating		
Standard		**Standard**
A3	ANSI Class 300	★
A6	ANSI Class 600	★
A9	ANSI Class 900	★
AF	ANSI Class 1500	★
AT[(1)]	ANSI Class 2500	★
D1	DIN PN10	★
D2	DIN PN16	★
D3	DIN PN25	★
D4	DIN PN40	★
D5	DIN PN63[(2)]	★
D6	DIN PN100	★

Table 4. Rosemount 1496 Orifice Flange Union ordering table

★ The Standard offering represents the most common options. The starred options (★) should be selected for best delivery. The Expanded offering is subject to additional delivery lead time.

Flange rating		
Expanded		**Expanded**
R3	Ring-Type Joint (RTJ) Class 300	
R6	Ring-Type Joint (RTJ) Class 600	
R9	Ring-Type Joint (RTJ) Class 900	
RF	Ring-Type Joint (RTJ) Class 1500	
RT	Ring-Type Joint (RTJ) Class 2500	
Flange union material type		
Standard		**Standard**
C	Carbon Steel	★
S	316/316L Stainless Steel	★
T	DIN 1.4571 (316Ti Stainless Steel)	★
L	304/304L Stainless Steel	★
Expanded		**Expanded**
H	Alloy C-276	
M	Alloy 400	

Options (include with selected model number)

Alternate pipe schedule / wall thickness[3]		
Standard		**Standard**
FA[4]	Schedule 5S	★
FB[4]	Schedule 10	★
FC[4]	Schedule 10S	★
FD[4]	Schedule 20	★
FE[4]	Schedule 30	★
FF[4]	Schedule 40	★
FG[4]	Schedule 40S	★
FH[4]	Schedule Standard (STD)	★
FI[4]	Schedule 60	★
FJ[4]	Schedule 80	★
FK[4]	Schedule 80S	★
FL[4]	Schedule Extra Strong (XS)	★
FM[4]	Schedule 100	★
FN[4]	Schedule 120	★
FP[4]	Schedule 140	★
FQ[4]	Schedule 160	★
FR[4]	Schedule Double Extra Strong (XXS)	★

Table 4. Rosemount 1496 Orifice Flange Union ordering table

★ The Standard offering represents the most common options. The starred options (★) should be selected for best delivery. The Expanded offering is subject to additional delivery lead time.

High temperature gaskets		
Standard		**Standard**
G1[5]	High Temperature Gaskets (spiral wound gaskets)	★
Alternate bolting material		
Standard		**Standard**
SS[6]	316SS Studs/Nuts	★
Alternate pressure tap type		
Standard		**Standard**
ST	Socketweld Pressure Taps (not available with Flange Union Type code DN)	★
Special cleaning		
Expanded		**Expanded**
P2	Cleaned for Special Processes	
Special inspection		
Standard		**Standard**
QC1	Visual and dimensional inspection with certificate	★
Material traceability certification		
Standard		**Standard**
Q8	Material certificate per ISO 10474 3.1.B and EN 10204 3.1.B	★
Code conformance		
Expanded		**Expanded**
J5[7]	Materials conforming to NACE MR01-75	
Country certification		
Standard		**Standard**
J1	Canadian Registration Number	★
Expanded		**Expanded**
J6	Conformance to European Pressure Equipment Directive (PED) 97/23/EC	
Typical model number: 1496 WN 040 A3 S		

(1) Available in line sizes from 2-12 inches.
(2) Previously PN64.
(3) Default pipe schedules are listed in Table 1 for the 1496 Orifice Flange Unions.
(4) These options are not available with flange type DN. These options should only be selected if the required pipe schedule is different from the default pipe schedule, as shown in Table 1. Standard wall thickness for DIN weldneck flanges is per ISO EN 1092-1 (2002). Consult the factory if a different wall thickness is required.
(5) Not available with Flange Union Type code RJ.
(6) Stainless steel bolting (ASTM A193 GR B8M Class 2) is classified as "low strength bolting" by the various ASME B31 piping codes and may not be suitable for all applications requiring code conformance.
(7) Materials of Construction comply with metallurgical requirements highlighted within NACE MR0175/ISO 15156 for sour oil field production environments. Environmental limits apply to certain materials. Consult latest standard for details. Selected materials also conform to NACE MR0103 for sour refining environments.

Appendix B Recommended installation requirements

Recommended straight run requirements . . . . . page 51
Bolt torque recommendations . . . . . page 62

B.1 Recommended straight run requirements

B.1.1 ISO 5167-2

International standard

First Edition
March 1, 2003

Measurement of fluid flow by means of pressure differential devices inserted in circular-cross section conduits running full - Part 2: Orifice Plates

Table B-1. Required straight run lengths between orifice plates and fittings without flow conditioners.

Values expressed as multiples of internal diameter, D

Diameter ratio, β	Upstream (inlet) side of orifice plate													
	Single 90° bend Two 90° bends in any plane (S > 30D)(1)		Two 90° bends in the same plane: S-configuration (30D ≥ S > 10D)(1)		Two 90° bends in the same plane: S-configuration (10D ≥ S)(1)		Two 90° bends in perpendicular planes		Two 90° bends in perpendicular planes (5D > S)(1)(2)		Single 90° tee with or without an extension Mitre 90° bend		Single 45° bend Two 45° bends in the same plane: S-configuration (S ≥ 2D)(1)	
1	2		3		4		5		6		7		8	
--	A(3)	B(4)	A(3)	B(4)	A(3)	B(4)	A(3)	B(4)	A(3)	B(4)	A(3)	B(4)	A(3)	B(4)
≤0.20	6	3	10	(5)	10	(5)	19	18	34	17	3	g	7	g
0.40	16	3	10	(5)	10	(5)	44	18	50	25	9	3	30	9
0.50	22	9	18	10	22	10	44	18	75	34	19	9	30	18
0.60	42	13	30	18	42	18	44	18	65	25	29	18	30	18
0.67	44	20	44	18	44	20	44	20	60	18	36	18	44	18
0.75	44	20	44	18	44	22	44	20	75	18	44	18	44	18

(1) S is the separation between the two bends measured from the downstream end of the curved portion of the upstream end to the upstream end of the curved portion of the downstream bend.
(2) This is not a good upstream installation; a flow conditioner should be used where possible.
(3) Column A for each fitting gives lengths corresponding to "zero additional uncertainty" values (see 6.2.3).
(4) Column B for each fitting gives lengths corresponding to "0.5% additional uncertainty" values (see 6.2.4).
(5) The straight length in Column A gives zero additional uncertainty; data are not available for shorter straight lengths which could be used to give the required straight lengths for Column B.

Diameter ratio, β	Upstream (inlet) side of orifice plate										Downstream (outlet) side of the orifice plate	
	Concentric reducer 2D to D over a length of 1.5D to 3D		Concentric reducer 0.5D to D over a length of D to 2D		Full bore ball valve or gate valve fully open		Abrupt symmetrical reduction		Thermometer pocket or well [c] of diameter ≤ 0.03D[(1)]		Fittings (columns 2 to 11) and the densitometer pocket	
1	9		10		11		12		13		14	
--	A[(2)]	B[(3)]	A[(2)]	B[(3)]	A[(2)]	B[(3)]	A[(2)]	B[(3)]	A[(2)]	B[(3)]	A[(2)]	B[(3)]
≤ 0.20	5	[(4)]	6	[(4)]	12	6	30	15	5	3	4	2
0.40	5	[(4)]	12	8	12	6	30	15	5	3	6	3
0.50	8	5	20	9	12	6	30	15	5	3	6	3
0.60	9	5	26	11	14	7	30	15	5	3	7	3.5
0.67	12	6	28	14	18	9	30	15	5	3	7	3.5
0.75	13	8	36	18	24	12	30	15	5	3	8	4

(1) A thermometer pocket or well of diameter between 0.03D and 0.13D may be installed provided that the value in Columns A and B are increased to 20 and 10 respectively. Such an installation is not, however, recommended.
(2) Column A for each fitting gives lengths corresponding to "zero additional uncertainty" values (see 6.2.3).
(3) Column B for each fitting gives lengths corresponding to "0.5% additional uncertainty" values (see 6.2.4).
(4) The straight length in Column A gives zero additional uncertainty; data are not available for shorter straight lengths which could be used to give the required straight lengths for Column B.

NOTE
The minimum straight lengths required are the lengths between various fittings located upstream or downstream of the orifice plate and the orifice plate itself. Straight lengths shall be measured from the downstream end of the curved portion of the nearest (or only) bend or of the tee or the downstream end of the curved or conical portion of the reducer or the expander.

NOTE
Most of the bends on which the lengths in this table are based had a radius of curvature equal to 1.5D.

Table B-2. Permitted range of straight lengths between an orifice plate and a 19-tube bundle flow straightener (1998) downstream of fittings located at a distance, L_f, from the orifice plate

Values expressed as multiples of internal diameter, D

Diameter ratio, β	Single 90° bend[(1)]				Two 90° bends[(1)] in perpendicular planes (2D ≥ S)[(2)]				Single 90° tee			
	$30 > L_f \geq 18$		$L_f \geq 30$		$30 > L_f \geq 18$		$L_f \geq 30$		$30 > L_f \geq 18$		$L_f \geq 30$	
1	2		3		4		5		6		7	
--	A[(3)]	B[(4)]	A[(3)]	B[(4)]	A[(3)]	B[(4)]	A[(3)]	B[(4)]	A[(3)]	B[(4)]	A[(3)]	B[(4)]
≤0.20	5 to 14.5	1 to n[(5)]	5 to 25	1 to n[(5)]	5 to 14.5	1 to n[(5)]	5 to 25	1 to n[(5)]	5 to 14.5	1 to n[(5)]	1 to 25	1 to n[(5)]
0.40	5 to 14.5	1 to n[(5)]	5 to 25	1 to n[(5)]	5 to 14.5	1 to n[(5)]	5 to 25	1 to n[(5)]	5 to 14.5	1 to n[(5)]	1 to 25	1 to n[(5)]

Table B-2. Permitted range of straight lengths between an orifice plate and a 19-tube bundle flow straightener (1998) downstream of fittings located at a distance, L_f, from the orifice plate

Diameter ratio, β	Single 90° bend[6]				Two 90° bends[1] in perpendicular planes (2D ≥ S)[7]				Single 90° tee			
	$30 > L_f \geq 18$		$L_f \geq 30$		$30 > L_f \geq 18$		$L_f \geq 30$		$30 > L_f \geq 18$		$L_f \geq 30$	
0.50	11.5 to 14.5	3 to n[5]	11.5 to 25	3 to n[5]	9.5 to 14.5	3 to n[5]	9 to 25	1 to n[5]	11 to 13	1 to n[5]	9 to 23	1 to n[5]
0.60	12 to 13	5 to n[5]	12 to 25	5 to n[5]	13.5 to 14.5	5 to n[5]	9 to 25	1 to n[5]	[8][9]	7 to n[5]	11 to 16	1 to n[5]
0.67	13	7 to n[5]	13 to 16.5	7 to n[5]	13 to 14.5	7 to n[5]	10 to 16	5 to n[5]	[8]	8 to n[5]	11 to 13	6 to n[5]
0.75	14	8 to n[5]	14 to 16.5	8 to n[5]	[8]	9.5 to n[5]	12 to 12.5	8 to n[5]	[8]	9 to n[5]	12 to 14	7 to n[5]
Recom-mended	13 for β ≤0.67	13 for β ≤0.75	14 to 16.5 for β ≤0.75	14 to 16.5 for β ≤0.75	13.5 to 14.5 for β ≤0.67	13.5 to 14.5 for β ≤0.75	12 to 12.5 for β ≤0.75	12 to 12.5 for β ≤0.75	13 for β ≤0.54	13 for β ≤0.75	12 to 13 for β ≤0.75	12 to 13 for β ≤0.75

(1) Bends should have a radius of curvature equal to 1.5D.
(2) S is the separation between the two bends measured from the downstream end of the curved portion of the upstream end to the upstream end of the curved portion of the downstream bend.
(3) *Column A for each fitting gives lengths corresponding to "zero additional uncertainty" values (see 6.3.2.3.2).*
(4) Column B for each fitting gives lengths corresponding to "0.5% additional uncertainty" values (see 6.3.2.3.3).
(5) n is the number of diameters such that the upstream end of the 19-tube bundle flow straightener (1998) is situated 1D from the downstream end of the curved or conical portion of the nearest fitting. It is desirable that the length between the upstream end of the 19-tube bundle flow straightener (1998) and the downstream end of the curved or conical portion of the nearest fitting should be at least 2.5D, except where this would not give an acceptable value for the distance between the orifice plate and the downstream end of the 19-tube bundle flow straightener.
(6) Bends should have a radius of curvature equal to 1.5D.
(7) S is the separation between the two bends measured from the downstream end of the curved portion of the upstream end to the upstream end of the curved portion of the downstream bend.
(8) It is not possible to find an acceptable location for a 19-tube bundle flow straightener (1998) downstream of the particular fitting for all values of Lf to which the column applies.
(9) if β =0.54 a value of 13 is possible.

Diameter ratio, β	Any fitting			
	$30 > L_f \geq 18$		$L_f \geq 30$	
1	8		9	
--	A[1]	B[2]	A[1]	B[2]
≤0.20	5 to 11	1 to n[3]	5 to 13	1 to n[3]
0.40	5 to 11	1 to n[3]	5 to 13	1 to n[3]
0.50	[4][5]	1 to n[3]	11.5 to 14.5	3 to n[3]
0.60	[4]	7 to n[3]	12 to 16	6 to n[3]
0.67	[4]	8 to 10	13	7 to n-1.5[3]
0.75	[4]	9.5	[4]	8 to 22
Recommended	9.5 for β ≤ 0.54	9.5 for β ≤ 0.75	13 for β ≤ 0.67	13 for β ≤ 0.75

(1) Column A for each fitting gives lengths corresponding to "zero additional uncertainty" values (see 6.3.2.3.2).
(2) Column B for each fitting gives lengths corresponding to "0.5% additional uncertainty" values (see 6.3.2.3.3).
(3) n is the number of diameters such that the upstream end of the 19-tube bundle flow straightener (1998) is situated 1D from the downstream end of the curved or conical portion of the nearest fitting. It is desirable that the length between the upstream end of the 19-tube bundle flow straightener (1998) and the downstream end of the curved or conical portion of the nearest fitting should be at least 2.5D, except where this would not give an acceptable value for the distance between the orifice plate and the downstream end of the 19-tube bundle flow straightener.
(4) It is not possible to find an acceptable location for a 19-tube bundle flow straightener (1998) downstream of the particular fitting for all values of L_f to which the column applies.
(5) If β =0.46 a value of 9.5 is possible.

NOTE
The straight lengths given in the table are the permitted lengths between the downstream end of a 19-tube bundle flow straightener (1998) (as described in 6.3.2.1) and the orifice plate given that a particular fitting is installed upstream of the 19-tube bundle flow straightener (1998) at a distance L_f from the orifice plate. The distance L_f from the orifice plate is measured to the downstream end of the curved portion of the nearest (or only) bend or of the tee or the downstream end of the curved or conical portion of the reducer or expander. The recommended values give tube bundle locations that are applicable over a specified range of β.

Figure B-1. Examples of installations with a 19-tube bundle flow straightener downstream of a single bend

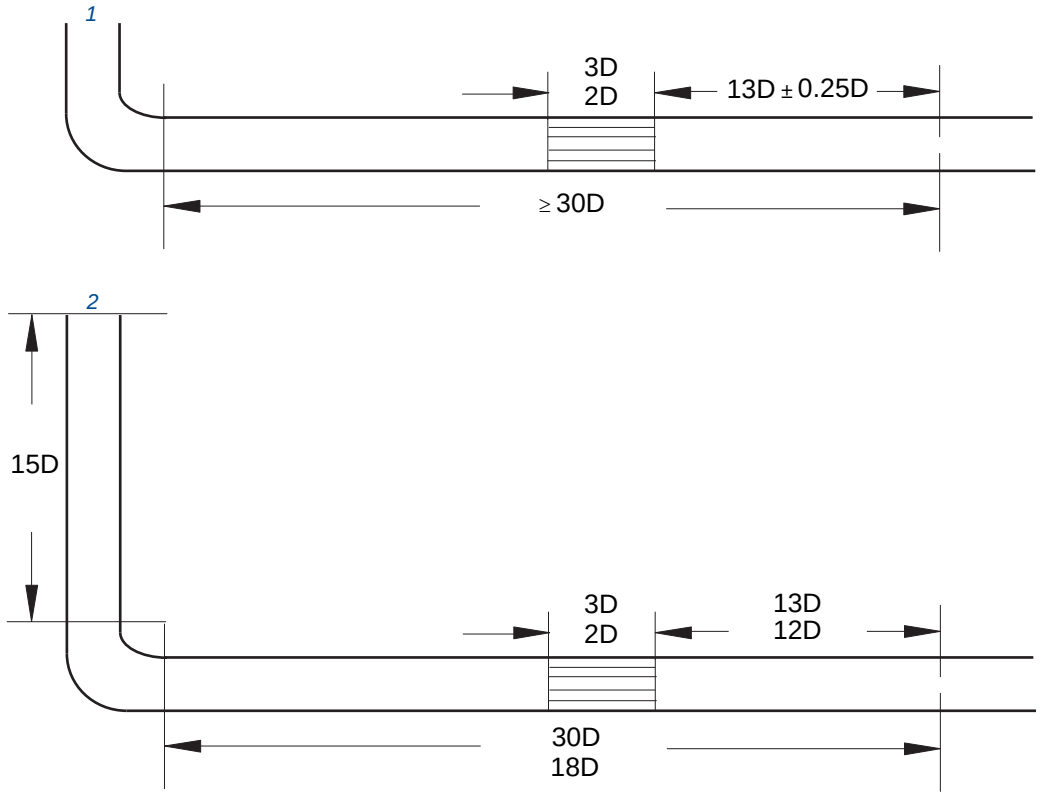

1 Position of any fitting placed at any distance upstream of the single bend.
2 Position of previous fitting placed before straight length upstream of the single bend.

B.1.2 AGA Report No. 3

Orifice Metering of Natural Gas and Other Related Hydrocarbon Fluids

American Gas Association

Fourth Edition, April 2000
Second Printing, June 2003

Figure B-2. Orifice meter tube layout for flanged or welded inlet

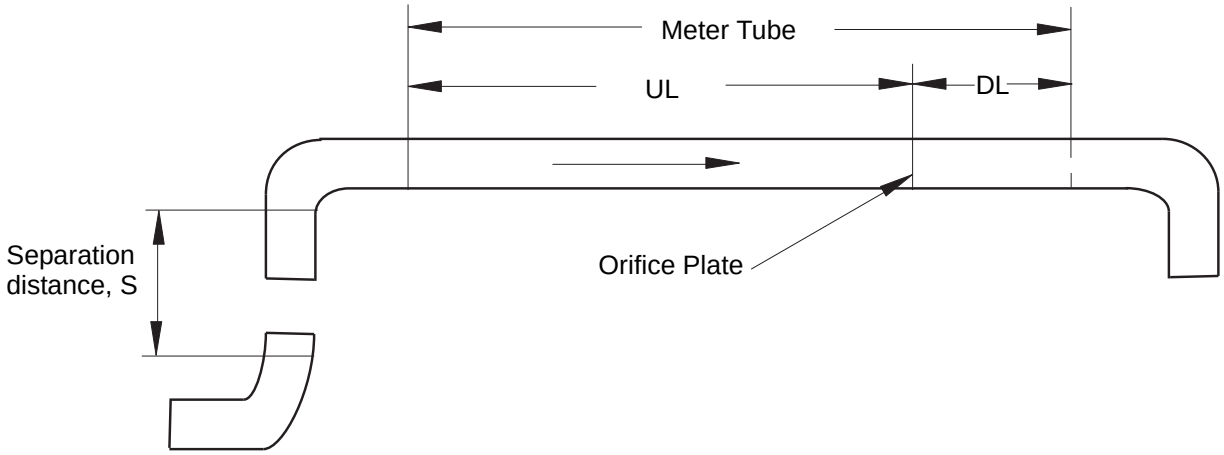

Table B-3. Orifice meter installation requirements without a flow conditioner

Diameter ratio β	Minimum straight unobstructed meter tube length from the upstream side of the orifice plate (in multiples of published internal pipe diameter, D_i)										
	a. Single 90° elbow b. Two 90° elbows in the same plane with $S > 30D_i$ c. Two 90° elbows in perpen-dicular planes with $S>15D_i$	Two 90° elbows in the same plane "S" configur-ation spacer $S \leq 10D_i$	Two 90° elbows in the same plane, "S" configur-ation spacer $10D_i < S < 30D_i$	Two 90° elbows in perpen-dicular planes, $S < 5D_i$*	Two 90° elbows in perpendicular planes, $D_i \leq S \leq 15D_i$	Single 90° Tee used as an elbow but not as a header element	a. Single 45° elbow b. Two 45° elbows in the same plane "S" configur-ation $S \geq 22D_i$	Gate valve at least 50% open	Con-centric reducer	Any other configuration (catch all category)*	Down-stream tube length
	UL	UL	UL	UL	UL	UL	UL	UL	UL	UL	DL
$\beta \leq 0.20$	6	10	10	50	19	9	30	17	6	70	2.8
0.30	11	10	12	50	32	9	30	19	6	108	3.0
0.40	16	10	13	50	44	9	30	21	6	145	3.2
0.50	30	30	18	95	44	19	30	25	7	145	3.5
0.60	44	44	30	95	44	29	30	30	9	145	3.9
0.67	44	44	44	95	44	36	44	35	11	145	4.2
0.75	44	44	44	95	44	44	44	44	13	145	4.5
Recommend-ed length for maximum range $\beta \leq 0.75$	44	44	44	95	44	44	44	44	13	145	4.5

UL = Minimum meter tube length upstream of the orifice plate in internal pipe diameter (D_i). Straight length shall be measured from the down-stream end of the curved portion of the nearest (or only) elbow or of the tee or the downstream end of the conical portion of reducer or expander.

DL = Minimum downstream meter tube length in internal pipe diameters (D_i).

S = Separation distance between piping elements in internal pipe diameter (D_i) measured from the downstream end of the curved portion of the upstream elbow to the upstream end of the curved portion of the downstream elbow.

** These installations exhibit the strong effect of Reynolds number and pipe roughness on the recommended length due to the rate of swirl decay. The present recommendations have been developed for high Reynolds numbers and smooth pipes to capture the worst case.*

NOTE
The tolerance on specified lengths for UL and DL is $\pm 0.25D_i$.

Figure B-3. Orifice Meter Tube Layout for Flanged or Welded Inlet

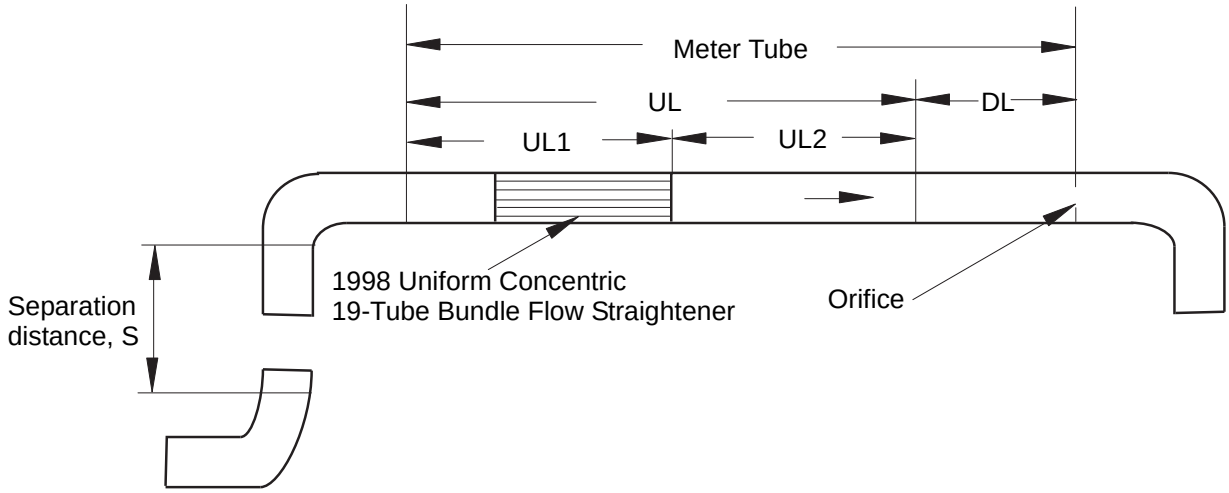

Table B-4. Orifice Meter Installation Requirements With 1998 Uniform Concentric 19-Tube Bundle Flow Straightener for Meter Tube Upstream Length of $17D_i \leq UL \leq 29D_i$.

Diameter ratio, β	Single 90° elbow $R/D_i = 1.5$	Two 90° elbows out of plane $S \leq 2D_i$ $R/D_i = 1.5$	Singe 90° tee used as an elbow but not as a header element	Partially closed valves (at least 50% open)	High swirl combined with single 90° Tee	Any fitting (catch-all category)	Downstream meter tube length
	UL2	UL2	UL2	UL2	UL2	UL2	DL
0.10	5-14.5	5-14.5	5-14.5	5-11	5-13	5-11.5	2.8
0.20	5-14.5	5-14.5	5-14.5	5-11	5-13	5-11.5	2.8
0.30	5-14.5	5-14.5	5-14.5	5-11	5-13	5-11.5	3.0
0.40	5-14.5	5-14.5	5-14.5	5-11	5-13	5-11.5	3.2
0.50	11.5-14.5	9.5-14.5	11-13	(1)		(2)	3.5
0.60	12-13	13.5-14.5	(3)	*Not allowed*	(3)	*Not allowed*	3.9
0.67	13	13-14.5	*Not allowed*	*Not allowed*	*Not allowed*	*Not allowed*	4.2
0.75	14	*Not allowed*	*Not allowed*	*Not allowed*	*Not allowed*	*Not allowed*	4.5
Recommended tube bundle location for maximum range of β	13 $\beta \leq 0.67$	13.5-14.5 $\beta \leq 0.67$	13 $\beta \leq 0.54$	9.5 $\beta \leq 0.47$	13 $\beta \leq 0.54$	9.5 $\beta \leq 0.46$	4.5

(1) $9.5D_i$ allowed for up to β =0.47.
(2) $9.5D_i$ allowed for up to β =0.46.
(3) $13D_i$ allowed for up to β =0.54.

S = Separation distance between elbows, measure as defined in Table A-1.
UL1 = UL - UL2. See Figure A-1.

NOTE
Lengths shown under the UL2 column are the dimensions shown in Figure A-1, expressed as the number of published internal pipe diameters (D_i) between the downstream end of the 1998 Uniform Concentric 19-Tube Bundle Flow Straightener and the upstream surface of the orifice plate.

NOTE
The tolerance on specified lengths for UL, UL2, and DL is $\pm 0.25D_i$.

NOTE
Not allowed means that it is not possible to find an acceptable location for the 1998 Uniform Concentric 19-Tube Bundle Flow Straightener downstream of the particular fitting for all values of UL.

Table B-5. Orifice Meter Installation Requirements With 1998 Uniform Concentric 19-Tube Bundle Flow Straightener for Meter Tube Upstream Length of UL ≥ $29D_i$.

Diameter Ratio, β	Single 90° elbow $R/D_i = 1.5$	Two 90° elbows out of plane $S \leq 2D_i$ $R/D_i = 1.5$	Singe 90° tee used as an elbow but not as a header element	Partially closed valves (at least 50% open)	High swirl combined with single 90° Tee	Any fitting (catch-all category)	Downstream meter tube length
	UL2	UL2	UL2	UL2	UL2	UL2	DL
0.10	5-25	5-25	5-25	5-13	5-23	5-13	2.8
0.20	5-25	5-25	5-25	5-13	5-23	5-13	2.8
0.30	5-25	5-25	5-25	5-13	5-23	5-13	3.0
0.40	5-25	5-25	5-25	5-13	5-23	5-13	3.2
0.50	11.5-25	9-25	9-23	7.5-15	9-19.5	11.5-14.5	3.5
0.60	12-25	9-25	11-16	10-17	11-16	12-16	3.9
0.67	13-16.5	10-16	11-13	10-13	11-13	13	4.2
0.75	14-16.5	12-12.5	12-14	11-12.5	14	*Not allowed*	4.5
Recommended tube bundle location for maximum range of β	13 $\beta \leq 0.75$	12-12.5 $\beta \leq 0.75$	12-13 $\beta \leq 0.75$	11-12.5 $\beta \leq 0.75$	13 $\beta \leq 0.75$	13 $\beta \leq 0.67$	4.5

S = Separation distance between elbows, measure as defined in Table A-1.
UL1 = UL - UL2. See Figure A-1.

NOTE
Lengths shown under the UL2 column are the dimensions shown in Figure A-1 and defined in Table A-2.

NOTE
The tolerance on specified lengths for UL, UL2, and DL is $\pm 0.25D_i$.

NOTE
Not allowed means that it is not possible to find an acceptable location for the 1998 Uniform Concentric 19-Tube Bundle Flow Straightener downstream of the particular fitting for all values of UL.

B.1.3 ASME MFC-3M-2004

Measurement of fluid flow in pipes using orifice, nozzle, and venturi

Table B-6. Required Straight Lengths Between Orifice Plates and Fittings Without Flow Conditioners

Upstream (inlet) side of orifice plate																
Diameter ratio β	Single 90° bend, two 90° bends in any plane: S-configuration (S>30D)[1]		Two 90° bends in same plane: S-configuration (30D≥S>10D)[1]		Two 90° bends in same plane: S-configuration (10D≥S)[1]		Two 90° bends in perpendicular planes: (30D≥S>5D)[1][2]		Two 90° bends in perpendicular planes: (5D<S)[1][3]		Single 90° tee with or without extension Mitre 90° bend		Single 45° bend, two 45° bends in same plane: S-configuration (S≥2D)[1]		Concentric expander 2D to D over length of 1.5D to 3D	
1	2		3		4		5		6		7		8		9	
	A	B	A	B	A	B	A	B	A	B	A	B	A	B	A	B
≤0.20	6	3	10	[4]	10	[4]	19	18	34	17	3	[4]	7	[4]	5	[4]
0.40	16	3	10	[4]	10	[4]	44	18	50	25	[4]	3	30	[4]	5	[4]
0.50	22	9	18	10	22	10	44	18	75	34	19	9	30	18	8	5
0.60	42	13	30	18	42	18	44	18	65[5]	25	29	18	30	18	9	5
0.67	44	20	44	18	44	20	44	20	60	18	36	18	44	18	12	6
0.75	44	20	44	18	44	22	44	20	75	18	44	18	44	18	13	8

Diameter ratio β	Concentric expander 0.5D to D over length of D to 2D		Full bore ball valve or gate valve fully open		Abrupt symmetrical reduction		Thermometer pocket or well of diameter ≤0.03D[6][7]		Downstream (outlet) side of the orifice plate: Fittings (columns 2 to 11) and densitometer pocket	
1	10		11		12		13		14	
≤0.20	A	B	A	B	A	B	A	B	A	B
0.40	6	[4]	12	6	30	15	5	3	4	2
0.50	12	8	12	6	30	15	5	3	6	3
0.60	20	9	12	6	30	15	5	3	6	3
0.67	26	11	14	7	30	15	5	3	7	3.5
0.75	28	14	18	9	30	15	5	3	7	3.5
Diameter ratio β	36	18	24	12	30	15	5	3	8	4

(1) S is the separation between the two bands measured from the downstream end of the curved portion of the upstream bend to the upstream end of the curved portion of the downstream bend.
(2) Values expressed as multiples of internal diameter, D.
(3) This is not a good upstream installation; a flow conditioner should be used where possible.

(4) The straight length in each Column A gives zero additional uncertainty; data are not available for shorter straight lengths which could be used to give the required straight lengths for each Column B.
(5) 95D is required for Re_D X 10^6 if S < 2D.
(6) The installation of thermometer pockets or wells will not alter the required minimum upstream straight lengths for the other fittings.
(7) A thermometer pocket or well of diameter between 0.03D and 0.13D may be installed provided that the values in each Column A and B are increased to 20 and 10 respectively. Such an installation is not, however, recommended.

GENERAL NOTES:
(a) Values expressed as multiples of internal diameter, D.
(b) The minimum straight lengths required are the lengths between various fittings located upstream or downstream of the orifice plate and the orifice plate itself. Straight lengths shall be measured from the downstream end of the curved portion of the nearest (or only) bend or of the tee or the downstream end of the curved or conical portion of the reducer or the expander.
(c) Most of the bends on which the lengths in this table are based had a radius of curvature equal to 1.5D.
(d) Column A for each fitting gives lengths corresponding to "zero additional uncertainty" values [see para. 2-5.2(c)].
(e) Column B for each fitting gives lengths corresponding to "0.5% additional uncertainty" values [see para. 2-5.2(d)].

Table B-7. Permitted range of straight lengths between orifice plate and 19-Tube bundle flow straightener (1998) downstream of fittings located at a distance, L_f, from the orifice plate

Diameter ratio, β	Single 90° bend(1)				Two 90° bends(1) in perpendicular planes (2D ≥ S)(2)				Single 90° tee			
	30 > L_f ≥ 18		L_f ≥ 30		30 > L_f ≥ 18		L_f ≥ 30		30 > L_f ≥ 18		L_f ≥ 30	
1	2		3		4		5		6		7	
--	A(3)	B(4)	A(3)	B(4)	A(3)	B(4)	A(3)	B(4)	A(3)	B(4)	A(3)	B(4)
≤0.20	5 to 14.5	1 to n(5)	5 to 25	1 to n(5)	5 to 14.5	1 to n(5)	5 to 25	1 to n(5)	5 to 14.5	1 to n(5)	1 to 25	1 to n(5)
0.40	5 to 14.5	1 to n(5)	5 to 25	1 to n(5)	5 to 14.5	1 to n(5)	5 to 25	1 to n(5)	5 to 14.5	1 to n(5)	1 to 25	1 to n(5)
0.50	11.5 to 14.5	3 to n(5)	11.5 to 25	3 to n(5)	9.5 to 14.5	3 to n(5)	9 to 25	1 to n(5)	11 to 13	1 to n(5)	9 to 23	1 to n(5)
0.60	12 to 13	5 to n(5)	12 to 25	5 to n(5)	13.5 to 14.5	5 to n(5)	9 to 25	1 to n(5)	(6)(7)	7 to n(5)	11 to 16	1 to n(5)
0.67	13	7 to n(5)	13 to 16.5	7 to n(5)	13 to 14.5	7 to n(5)	10 to 16	5 to n(5)	(6)	8 to n(5)	11 to 13	6 to n(5)
0.75	14	8 to n(5)	14 to 16.5	8 to n(5)	(6)	9.5 to n(5)	12 to 12.5	8 to n(5)	(6)	9 to n(5)	12 to 14	7 to n(5)
Recommended	13 for β ≤0.67	13 for β ≤0.75	14 to 16.5 for β ≤0.75	14 to 16.5 for β ≤0.75	13.5 to 14.5 for β ≤0.67	13.5 to 14.5 for β ≤0.75	12 to 12.5 for β ≤0.75	12 to 12.5 for β ≤0.75	13 for β ≤0.54	13 for β ≤0.75	12 to 13 for β ≤0.75	12 to 13 for β ≤0.75

(1) Bends should have a radius of curvature equal to 1.5D.
(2) S is the separation between the two bends measured from the downstream end of the curved portion of the upstream end to the upstream end ofthe curved portion of the downstream bend.
(3) Column A for each fitting gives lengths corresponding to "zero additional uncertainty" values (see 6.3.2.3.2).
(4) Column B for each fitting gives lengths corresponding to "0.5% additional uncertainty" values (see 6.3.2.3.3).
(5) n is the number of diameters such that the upstream end of the 19-tube bundle flow straightener (1998) is situated 1D from the downstream end of the curved or conical portion of the nearest fitting. It is desirable that the length between the upstream end of the 19-tube bundle flow straightener (1998) and the downstream end of the curved or conical portion of the nearest fitting should be at least 2.5D, except where this would not give an acceptable value for the distance between the orifice plate and the downstream end of the 19-tube bundle flow straightener.
(6) It is not possible to find an acceptable location for a 19-tube bundle flow straightener (1998) downstream of the particular fitting for all values of L_f to which the column applies.
(7) if β =0.54 a value of 13 is possible

Diameter ratio, β	Any fitting			
	$30 > L_f \geq 18$		$L_f \geq 30$	
1	8		9	
--	A(1)	B(2)	A(1)	B(2)
≤0.20	5 to 11	1 to n(3)	5 to 13	1 to n(3)
0.40	5 to 11	1 to n(3)	5 to 13	1 to n(3)
0.50	(4)(5)	1 to n(3)	11.5 to 14.5	3 to n(3)
0.60	(4)	7 to n(3)	12 to 16	6 to n(3)
0.67	(4)	8 to 10	13	7 to n-1.5(3)
0.75	(4)	9.5	(4)	8 to 22
Recommended	9.5 for β ≤0.54	9.5 for β ≤0.75	13 for β ≤0.67	13 for β ≤0.75

(1) Column A for each fitting gives lengths corresponding to "zero additional uncertainty" values (see 6.3.2.3.2).
(2) Column B for each fitting gives lengths corresponding to "0.5% additional uncertainty" values (see 6.3.2.3.3).
(3) n is the number of diameters such that the upstream end of the 19-tube bundle flow straightener (1998) is situated 1D from the downstream end of the curved or conical portion of the nearest fitting. It is desirable that the length between the upstream end of the 19-tube bundle flow straightener (1998) and the downstream end of the curved or conical portion of the nearest fitting should be at least 2.5D, except where this would not give an acceptable value for the distance between the orifice plate and the downstream end of the 19-tube bundle flow straightener.
(4) It is not possible to find an acceptable location for a 19-tube bundle flow straightener (1998) downstream of the particular fitting for all values of L_f to which the column applies.
(5) If β =0.46 a value of 9.5 is possible.

Figure B-4. Examples of installations with a 19-Tube bundle flow straightener downstream of a single bend

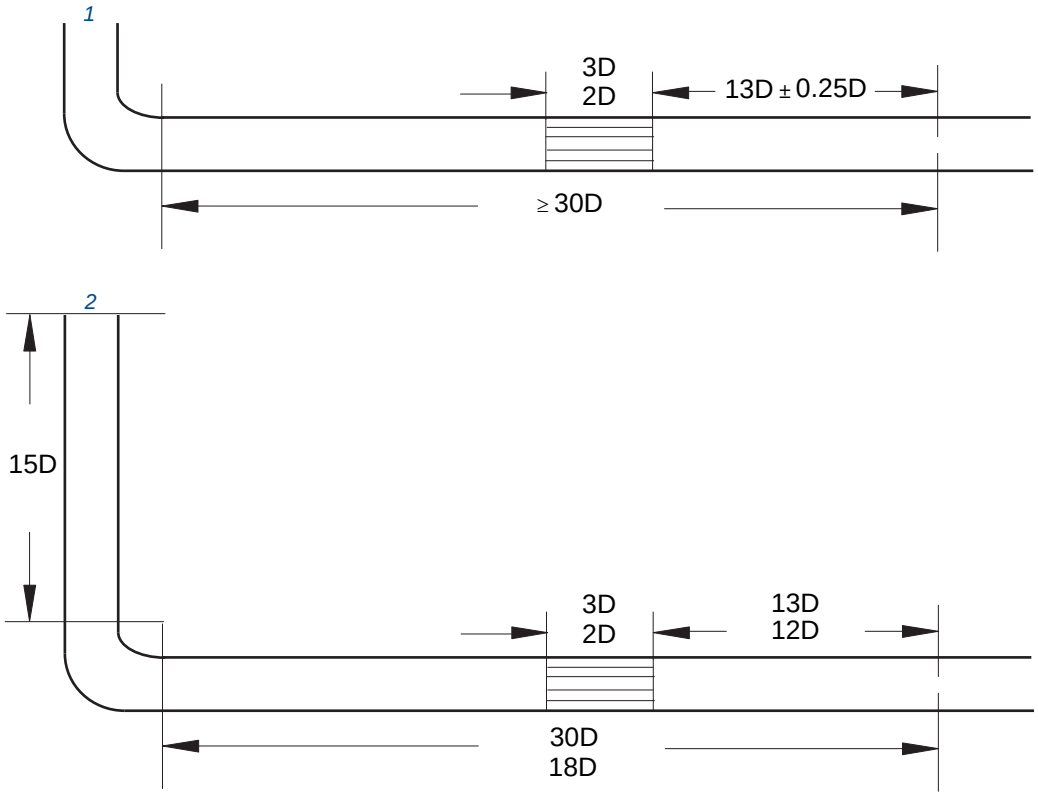

1 Position of any fitting placed at any distance upstream of the single bend.
2 Position of previous fitting placed before straight length upstream of the single bend.

B.2 Bolt torque recommendations

The Bolt Torque tables are to be used for reference only, as each installation must be checked for leaks and tightened as necessary.

The torque required to produce adequate bolt stress is a function of many parameters, including but not limited to:

- Diameter of bolt
- Type and # of threads of bolt
- Material of bolt
- Gasket type
- Condition of nut bearing surfaces
- Lubrication of bolt threads and nut bearing surfaces

The following tables are typical torque recommendations by Emerson gasket vendors for use with gaskets provided:

Table B-8. Class 300# 1/16-in. non-asbestos flat gasket

Flange size in. (mm)	Number of bolts	Bolt diameter in. (mm)	Bolt torque ft.-lbs. (N-m)
2 (5.08)	8	5/8 (15.9)	52 (71)
2.5 (6.35)	8	3/4 (19.1)	73 (99)
3 (7.62)	8	3/4 (19.1)	106 (144)
4 (10.16)	8	3/4 (19.1)	136 (185)
6 (15.24)	12	3/4 (19.1)	149 (185)
8 (20.32)	12	7/8 (22.2)	246 (335)
10 (25.4)	16	1 (25.4)	261 (355)
12 (30.48)	16	1 1/8 (28.6)	391 (532)
14 (35.56)	20	1 1/8 (28.6)	341 (464)
16 (40.64)	20	1 1/4 (31.8)	488 (664)
18 (45.72)	24	1 1/4 (31.8)	542 (737)
20 (50.8)	24	1 1/4 (31.8)	598 (813)
24 (60.96)	24	1 1/2 (38.1)	927 (1261)

Table B-9. Class 600# 1/8-in. thick spiral wound gasket

Flange size in. (mm)	Number of bolts	Bolt diameter in. (mm)	Bolt torque ft.-lbs. (N-m)
2 (5.08)	8	5/8 (15.9)	90 (122)
2.5 (6.35)	8	3/4 (19.1)	150 (203)
3 (7.62)	8	3/4 (19.1)	150 (203)
4 (10.16)	8	7/8 (22.2)	240 (325)
6 (15.24)	12	1 (25.4)	368 (499)
8 (20.32)	12	1 1/8 (28.6)	533 (723)
10 (25.4)	16	1 1/4 (31.8)	750 (1017)
12 (30.48)	20	1 1/4 (31.8)	750 (1017)
14 (35.56)	20	1 3/8 (34.9)	1020 (1383)
16 (40.64)	20	1 1/2 (38.1)	1200 (1627)
18 (45.72)	20	1 5/8 (41.3)	1650 (2237)
20 (50.8)	24	1 5/8 (41.3)	1650 (2237)
24 (60.96)	24	1 7/8 (47.6)	3000 (4067)

Table B-10. Class 900# 1/8-in. thick spiral wound gasket

Flange size in. (mm)	Number of bolts	Bolt diameter in. (mm)	Bolt torque ft.-lbs. (N-m)
2 (5.08)	USE CLASS 1500#		
2.5 (6.35)	USE CLASS 1500#		
3 (7.62)	8	7/8 (22.2)	240 (325)
4 (10.16)	8	1 1/8 (28.6)	533 (723)
6 (15.24)	12	1 1/8 (28.6)	533 (723)
8 (20.32)	12	1 3/8 (34.9)	1020 (1383)
10 (25.4)	16	1 3/8 (34.9)	1020 (1383)
12 (30.48)	20	1 3/8 (34.9)	1020 (1383)
14 (35.56)	20	1 1/2 (38.1)	1200 (1627)
16 (40.64)	20	1 5/8 (41.3)	1650 (2237)
18 (45.72)	20	1 7/8 (47.6)	3000 (4067)
20 (50.8)	20	2 (50.8)	3300 (4474)
24 (60.96)	20	2 1/2 (63.5))	6600 (8948)

Table B-11. Class 1500# 1/8-in. thick spiral wound gasket

Flange size in. (mm)	Number of bolts	Bolt diameter in. (mm)	Bolt torque ft.-lbs. (N-m)
2 (5.08)	8	7/8 (22.2)	240 (325)
2.5 (6.35)	8	1 (25.4)	368 (499)
3 (7.62)	8	1 1/8 (28.6)	533 (723)
4 (10.16)	8	1 1/4 (31.8)	750 (1017)
6 (15.24)	12	1 3/8 (34.9)	1020 (1383)
8 (20.32)	12	1 5/8 (41.3)	1650 (2237)
10 (25.4)	12	1 7/8 (47.6)	3000 (4067)
12 (30.48)	16	2 (50.8)	3300 (4474)
14 (35.56)	16	2 1/4 (57.2)	4770 (6467)
16 (40.64)	16	2 1/2 (63.5)	6600 (8948)
18 (45.72)	16	2 3/4 (69.9)	8880 (12040)
20 (50.8)	16	3 (76.2)	11580 (15700)
24 (60.96)	16	3 1/2 (88.9)	18750 (25422)

Table B-12. Class 2500# 1/8-in. thick spiral wound gasket

Flange size in. (mm)	Number of bolts	Bolt diameter in. (mm)	Bolt torque ft.-lbs. (N-m)
2 (5.08)	8	1 (25.4)	368 (499)
2.5 (6.35)	8	1 1/8 (28.6)	533 (723)
3 (7.62)	8	1 1/4 (31.8)	750 (1017)
4 (10.16)	8	1 1/2 (38.1)	1200 (1627)
6 (15.24)	8	2 (50.8)	3300 (4474)
8 (20.32)	12	2 (50.8)	3300 (4474)
10 (25.4)	12	2 1/2 (63.5)	6600 (8948)
12 (30.48)	12	2 3/4 (69.9)	8880 (12040)

Appendix C Calculation data sheet

ROSEMOUNT INC.
1495 ORIFICE PLATE
CALCULATION DATA SHEET

GENERAL DATA

Customer:	Customer Name
Project:	20XX Official Calculations
S. O. No:	Sales Order Number
P. O. No:	Customer P.O Number
Calc. Date:	XX/XX/20XX
Model No:	1495PC080A3SA04625BC
Tag No:	Tag Number

PRODUCT DESCRIPTION

Plate Type:	Square-edge	Tap Type:	Flange tapping
Plate Material:	316 SST	Tap Location:	Upstream
Drain/Vent Diameter:	None	Line Size:	8-inch
Process Connection:		Pipe Schedule:	40
		Pipe Material:	Carbon Steel

INPUT DATA

Fluid Type:	Steam				
Fluid Description:					
Pipe I.D.:	7.981	inch			
Pressure:	60	psig	Base Pressure:	14.6960001	psia
Temperature at Flow:	307.33	F	Base Temperature:	59	F
Absolute Viscosity:	0.014093	cP			
Isentropic Exponent:	1.317455				
Compressibility at Flow:			Base Compressibility:		
Density at Flow:	0.171328	lb/ft^3	Base Density:		lb/ft^3

Flow Rates:

Minimum:	6000	lb/hr
Normal:	8000	lb/hr
Maximum:	10000	lb/hr
Full Scale:	10000	lb/hr

CALCULATED DATA (Calculation performed at normal conditions. DP in H_2O at 68 °F)

Orifice Bore Size:	4.000	inch	Bore Reynolds Number (Normal):	894278.832	
DP at Min. Flow:	16.379	in H_2O at 68 °F	Pipe Reynolds Number (Normal):	448514.484	
DP at Normal Flow:	29.117	in H_2O at 68 °F	Gas Expansion Factor:	0.99538888	
DP at Max. Flow:	45.496	in H_2O at 68 °F	Permanent Pressure Loss:		
URV (DP at Full Scale):	45.496	in H_2O at 68 °F	at Normal Flow:	21.2294996	in H_2O at 68 °F
Drain/Vent Corr. Factor:	1		at Max Flow:	33.1710931	in H_2O at 68 °F
Beta:	0.50119		Velocity at Max. Flow:	46.6687791	ft/sec
Discharge Coefficient:	0.60366		Minimum Accurate Flow:	2111.34891	lb/hr

Notes

Calculation by VLB

This report is provided according to the terms and conditions of the instrument Toolkit End-Use Customer License agreement.

Version: 3.0 (Build 91) Printed on: XX/XX/XX 11:07

NOTES

Standard Terms and Conditions of Sale can be found at www.rosemount.com/terms_of_sale
The Emerson logo is a trademark and service mark of Emerson Electric Co.
Rosemount. the Rosemount logotype, and SMART FAMILY are registered trademarks of Rosemount Inc.
Coplanar is a trademark of Rosemount Inc.
Halocarbon is a trademark of the Halocarbon Products Corporation.o.
Fluorinert is a registered trademark of Minnesota Mining and Manufacturing Company Corporation
Syltherm 800 and D.C. 200 are registered trademarks of Dow Corning Corporation.
Neobee M-20 is a registered trademark of PVO International, Inc.
HART is a registered trademark of the HART Communication Foundation.
Foundation fieldbus is a registered trademark of the Fieldbus Foundation.
All other marks are the property of their respective owners.

© February 2014 Rosemount, Inc. All rights reserved.

Emerson Process Management
Rosemount Measurement
8200 Market Boulevard
Chanhassen MN 55317 USA
Tel (USA) 1 800 999 9307
Tel (International) +1 952 906 8888
Fax +1 952 906 8889

Emerson Process Management
GmbH & Co.
Argelsrieder Feld 3
82234 Wessling
Germany
Tel 49 (8153) 9390
Fax 49 (8153) 939172

Emerson Process Management Asia
Pacific Private Limited
1 Pandan Crescent
Singapore 128461
T (65) 6777 8211
F (65) 6777 0947
Enquiries@AP.EmersonProcess.com

Beijing Rosemount Far East
Instrument Co., Limited
No. 6 North Street,
Hepingli, Dong Cheng District
Beijing 100013, China
T (86) (10) 6428 2233
F (86) (10) 6422 8586

ROSEMOUNT®

EMERSON.
Process Management